Segmentbocht 15° DW

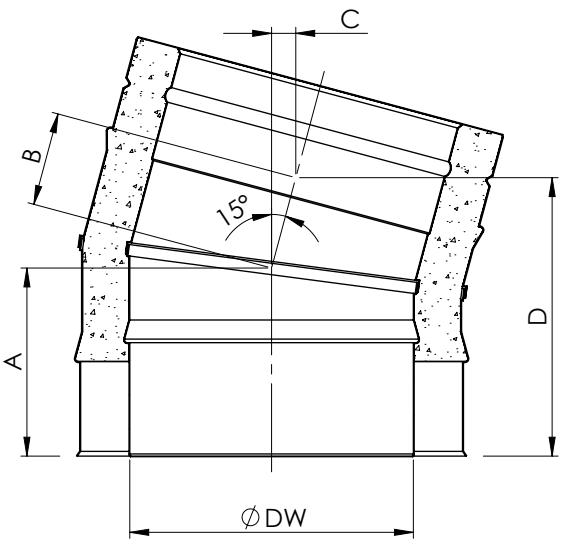

DW	MATEN				ARTIKELCODE
	A	B	C	D	
80	95	45	12	138	DW080012
100	96	46	12	141	DW100012
125	98	48	12	144	DW125012
130	98	48	12	145	DW130012
150	99	49	13	147	DW150012
180	101	51	13	151	DW180012
200	103	53	14	154	DW200012
250	106	56	15	160	DW250012
300	109	59	15	167	DW300012
350	113	63	16	173	DW350012
400	116	66	17	180	DW400012

16.04.2020
REV: 0

Thermo Products
rookgasafvoersystemen

Thermo Products B.V.
Bedrijfsweg 14
4387PD Vlissingen
www.thermoproducts.nl