MUSTANG

WWW,MUSTANGHAMMER.COM

CATALOGUE
2022

ABOUT US

MUSTANG has been manufacturing and distributing hydraulic hammers and other demolition equipment. All components are built in Europe factories, through advanced CNC machineries and high technologies assuring maximum precision and finishing of all the surfaces.

All the production steps to the final products, such as 3D designing, choice of raw materials, assembling, testing, packaging are carried oud with top accuracy and in compliance with ISO 9001/2008 standards.

MUSTANG's company policy is to maximize customers' satisfaction through continuous improvements of the products' performance and reliability. In order to achieve these goals, particular attention is paid to investments in efficient machineries, pre- and after-sales services, Research & Development.

The number of positive feedback we receive from our customers using our demolition equipment in the hardest quarrying, tunnelling, demolition and construction applications worldwide, is the most precious award for the accurate job of our people.

MUSTANG

GUARANTEES

A HIGH QUALITY

100% MADE IN ITALY PRODUCT.

WWW.MUSTANGHAMMER.COM

MUSTANG

WWW,MUSTANGHAMMER.COM

All illustrations and numerical data in this catalog are purely indicative and subject to change at our discretion and without notice. We therefore reserve the right to modify them with a view to improving and continuously developing our product.

HYDRAULIC BREAKER SERIES HM

- **NO DIAPHRAGM**
- **PRESSURIZED SERIES, SUITABLE FOR ALL TYPES OF EXCAVATORS**
- **SILENCED BODY**

EXCAVATION LINE

The hydraulic breaker is an equipment of the earth-moving and mining industry, whose components are subjected to high levels of stress, working mostly indifficult situations. In order to make hydraulic breakers increasingly reliable and guarantee performance and power, MUSTANG HAMMER has introduced the HM line, obtained with in-depth R&D studies carried out in over 30 years of activity.

Mining & Quarrying | **Demolition & Renovation** | Construction | Metallurgical Industry | Recycling

MODEL		HM70	HM100	HM150	HM200	HM250	HM300	HM500	HM750	HM1000	HM1300	HM1500	HM1700	HM1900	HM2200	HM2500	HM2700
CARRIER WEIGHT	ton	0.5-2.5	1.2-3.5	1.5-4.5	2.5-6.5	3-8	4.5-9	6-11	8-16	8-16	14-20	16-23	19-28	19-28	22-32	22-32	22-32
WEIGHT	kg	75	105	145	205	255	275	420	650	700	1050	1150	1600	1650	1950	2050	2100
HEIGHT WITH STAND. TOOL	mm	900	1000	1100	1250	1380	1475	1900	1850	1900	2050	2600	2800	2800	2900	2900	3000
TOOL DIAMETER	mm	40	45	50	58	64	75	95	95	95	118	118	130	130	150	150	150
REQUIRED OIL SUPPLY	l/min	15-25	20-30	20-35	25-45	30-55	35-60	45-80	70-90	70-100	90-120	110-140	120-145	125-155	140-185	140-185	145-195
OIL HAMMER PRESSURE	bar	60-130	70-140	80-150	100-150	100-160	100-160	100-160	100-160	110-170	160	160	160	170	170	170	170
BLOWS PER MINUTE	/min	600-900	700-1200	600-1150	500-1000	580-1060	550-1000	550-1000	600-900	600-900	700-900	700-900	600-700	600-800	600-700	600-700	600-800
ENERGY PER BLOW	j	160	240	380	500	700	1000	1500	1800	2000	2400	3000	3200	3700	4500	4500	5000
MAX. BACK PRESSURE	bar	25	25	25	25	25	25	25	25	25	25	25	25	25	25	25	25
INNER DIAM. IN HOSE	inch	1/2”	1/2”	1/2”	3/4”	3/4”	3/4”	3/4”	3/4”	1”	1”	1”	1”	1”	1”	1”	1”
INNER DIAM OUT HOSE	inch	1/2”	1/2”	1/2”	3/4”	3/4”	3/4”	3/4”	3/4”	1”	1”	1”	1”	1”	1”	1”	1”

MUSTANG
WWW.MUSTANGHAMMER.COM

All illustrations and numerical data in this catalog are purely indicative and subject to change at our discretion and without notice. We therefore reserve the right to modify them with a view to improving and continuously developing our product.

- **DESIGNED AND BUILT TO ACHIEVE MORE POWER**
- **WEAR PARTS ARE REPLACEABLE ON SITE**

STATIC PULVERIZER SERIES FH

DEMOLITION

The Primary Demolition is that complex of works
aimed at breaking down a building and removing the materials.
Fixed crushers for secondary demolition.

Mining & Quarrying | **Demolition & Renovation** | Construction | Metallurgical Industry | Recycling

MODEL		FH04	FH10	FH15	FH18	FH25
A	mm	1270	1990	2090	2490	2690
B	mm	390	350	670	840	870
STEEL BLADE	mm	160	200	200	200	300
F1	t	40	80	80	100	110
F2	t	25	45	47	60	70
F3	t	10	25	35	40	40
	l/min	20/70	140/180	140/200	200/250	200/300
	bar	250	300	300	300	300
	kg	400	1100	1500	2000	2600
	t	4/9	13/18	13/28	16/25	20/32
ø MAX	inch	25	30	30	40	40

MUSTANG
WWW.MUSTANGHAMMER.COM

All illustrations and numerical data in this catalog are purely indicative and subject to change at our discretion and without notice. We therefore reserve the right to modify them with a view to improving and continuously developing our product.

Technical Drawing

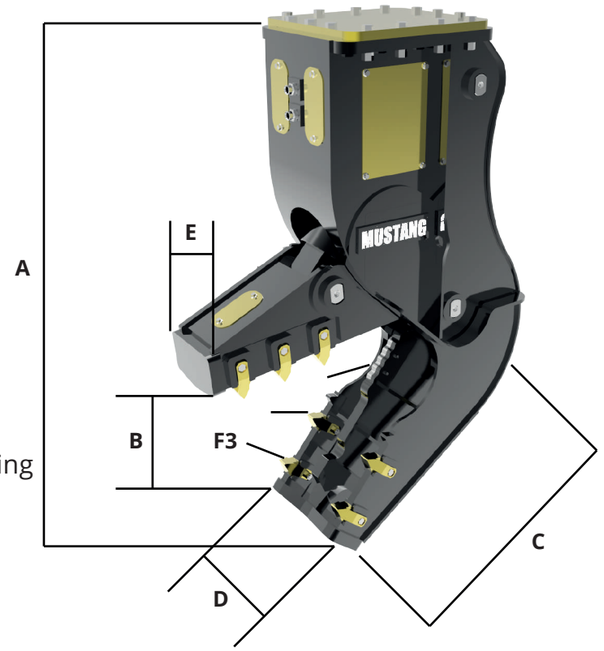

ROTATING PULVERIZER SERIES RH

- **ROTATION 360°.**
- **EXCELLENT SPEED/POWER TO WEIGHT RATIO**
- **DESIGNED AND BUILT TO ACHIEVE MORE POWER**

DEMOLITION

The Primary Demolition is that complex of works aimed at breaking down a building and removing the materials. Secondary Demolition consists in the separation and or reduction in fragments of what has already been demolished. Rotating crusher for primary and secondary demolition.

Mining & Quarrying | **Demolition & Renovation** | Construction | Metallurgical Industry | Recycling

MODEL		RH05	RH09	RH12	RH16	RH20	RH26
A	mm	1390	1560	1690	1840	1940	2310
B	mm	430	460	590	640	670	790
STEEL BLADE	mm	160	160	160	200	200	200
F1	t	90	110	120	160	180	200
F2	t	40	50	60	100	110	130
F3	t	25	30	30	50	55	70
	°	360	360	360	360	360	360
	l/min	5/8	5/8	5/8	20/25	20/30	20/30
	bar	70	70	70	70	70	70
	l/min	50/70	60/100	70/110	110/160	140/200	180/230
	bar	250	260	260	300	300	300
	kg	550	800	1050	1500	1800	2300
	t	5/12	6/13	9/15	12/22	15/22	20/26
ø MAX	inch	20	25	25	35	40	45

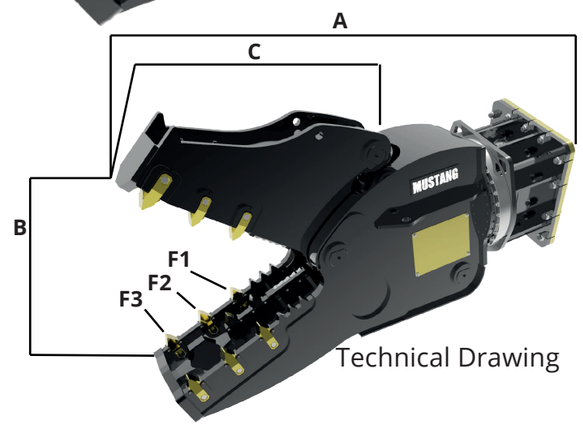

Technical Drawing

All illustrations and numerical data in this catalog are purely indicative and subject to change at our discretion and without notice. We therefore reserve the right to modify them with a view to improving and continuously developing our product.

MUSTANG
WWW.MUSTANGHAMMER.COM

ROTATING PULVERIZER SERIES RK

- ROTATION 360°
- EXCELLENT SPEED/POWER TO WEIGHT RATIO
- DESIGNED AND BUILT TO ACHIEVE MORE POWER

DEMOLITION

The Primary Demolition is that complex of works aimed at breaking down a building and removing the materials.
Rotating crusher for primary demolition

Cava & Miniera | **Demolizione & Costruzione** | Costruzione | Industria Metallurgica | Riciclaggio

MODEL		RK13	RK17	RK26
A	mm	1640	1950	2350
B	mm	660	750	870
STEEL BLADE	mm	160	200	200
F1	t	130	190	220
F2	t	60	110	120
F3	t	35	60	70
	°	360	360	360
	l/min	5/8	20/25	20/30
	bar	70	70	70
	l/min	70/100	140/200	180/230
	bar	260	300	300
	kg	1050	1700	2400
	t	9/15	15/22	21/28
ø MAX	inch	25	35	40

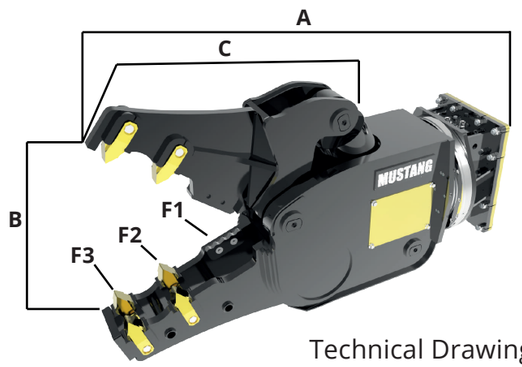

Technical Drawing

All illustrations and numerical data in this catalog are purely indicative and subject to change at our discretion and without notice. We therefore reserve the right to modify them with a view to improving and continuously developing our product.

MUSTANG
WWW.MUSTANGHAMMER.COM

MULTI PURPOSE GRABS SERIES GRP

- **REPLACEABLE WEAR PLATES**
- **ROBUST AND FULLY INTEGRATED ROTATION**
- **HIGH CLOSING FORCE**

RECYCLING

Within the production cycle for the handling of materials of various different nature (construction or waste disposal site) either heavy or voluminous, specific handling grapple equipment of different type is used.

Cava & Miniera | **Demolizione & Costruzione** | Costruzione | Industria Metallurgica | Riciclaggio

MODEL		GRP150	GRP250	GRP450	GRP750	GRP1000	GRP1500	GRP2000
A	mm	890	1090	1190	1540	1790	1940	2090
B	mm	340	390	490	690	790	990	1090
C	mm	540	670	840	1140	1440	1540	1640
L	mm	390	490	590	690	870	1010	1190
	kg	140	230	370	690	990	1490	1990
	t	1.5/4	4/7	5/12	7/16	13/19	17/23	22/31
	bar	200	200	200	250	300	300	300
	l/min	15	20	25	45	50	75	90
	bar	70	70	70	70	70	70	70
	l/min	2	2	2	15	30	30	30

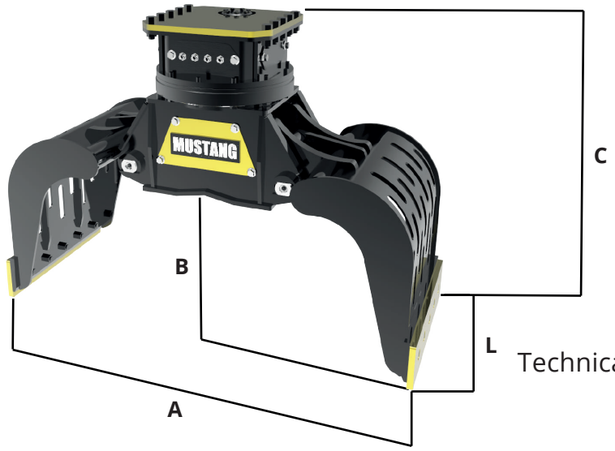

Technical Drawing

All illustrations and numerical data in this catalog are purely indicative and subject to change at our discretion and without notice. We therefore reserve the right to modify them with a view to improving and continuously developing our product.

MUSTANG
WWW.MUSTANGHAMMER.COM

NOTES

MUSTANG

WWW,MUSTANGHAMMER.COM

Peso attrezzatura
Equipment weight
Eigengewicht
Poids de l'outil
Peso del implemento
Вес оборудования

Peso escavatore
Excavator weight
Baggergewicht
Poids du porteur
Peso Escavadora
Вес экскаватора

Peso escavatore - posto benna
Excavator weight - stick mounting
Baggergewicht - Loeffelstiehlmontage
Poids du porteur - au but du
Peso escavadora al segundo brazo
Вес экскаватора (Рукоять)

Peso escavatore - posto braccio
Excavator weight - boom mounting
Baggergewicht - Baggerarmmontage
Poids machibe - montage a la place du balancier
Peso escavadora al balancìn

F3

Forza in punta
Tip force
Schliesskraft auf die Spitze
Force à la pointe
Fuerza en punta
Мощность на наконечнике

Lunghezza lama
Steel blade length
Messerlaenge
Longuer couteau
Anchura cuchilla
Длина ножей

Rotazione continua 360°
360° rotation
360° Kontinuierliche Rotation
Rotation continue 360°
Rotaciòn continua a 360°
Непрерывное вращение на 360°

Portata olio della rotazione
Rotation oil flow capacity
Oelfluss der Rotation
Dèbit hydraulique rotation
Caudal de aceite necesario pata la rotaciòn

Pressione di esercizio rotazione
Rotation Pressure
Oeldruck der Rotation
Pression hydraulique rotation
Presiòn necesaria pata la rotaciòn
Давление ротации

Pressione di esercizio escavatore
Excavator working pressure
Oeldruck der Bagger
Pression hydraulique excavateur
Prèsion de la Escavadora
Давление откр./закр. челюстей

Portata olio escavatore
Excavator oil flow capacity
Oelfluss der Bagger
Dèbit hydraulique excavateur
Caudal aceite de la Escavadora
Поток откр./закр. челюстей

**All illustrations and numerical data in this catalog are purely indicative and subject to change at our discretion and without notice.
We therefore reserve the right to modify them with a view to improving and continuously developing our product.**

Zona industriale lotto CA/2, Molfetta (BA) 70056 sales@mustanghammer.com +39 080.3375317

© 2021 MUSTANGHAMMER®. All rights reserved. | P.IVA IT06233290722 WWW.MUSTANGHAMMER.COM