ETC

Source 4WRD II

White-Light LED Retrofit

Type(s)

Project

Date

Notes

GENERAL INFORMATION

Source 4WRD II (Watt Reduction Device) LED is a replacement for a standard Source Four burner assembly that converts the HPL source to a white-light LED and provides a significant reduction in power consumption. The simple and quick upgrade is nondestructive and takes less than a minute. In most cases it can even be done without breaking the fixture's focus. Source 4WRD II LED is theatrically dimmable via DMX or line dimmable, with a traditional LED curve, to allow flexibility for your installation. And, because it is an LED source, your fixtures will run cool and efficiently without lamp replacements.

APPLICATIONS

- Energy saving retrofits
- Houses of worship
- Universities and schools
- Hospitality
- Retail
- Exhibition centers
- Meeting rooms
- Clubs
- Theatres

ORDERING INFORMATION

Source 4WRD II

MODEL	DESCRIPTION	PART NUMBER	
S4WRDT120	Source 4WRD II, Retrofit Kit, 120 V	7067A1112	
S4WRDT120FB	Source 4WRD II, Retrofit Kit, 120 V - w/ Fixture Body	7067A1113	
S4WRDG120	Source 4WRD II Gallery (90+ CRI), Retrofit Kit, 120 V	7067A1114	
S4WRDG120FB	Source 4WRD II Gallery (90+ CRI), Retrofit Kit, 120 V - w/ Fixture Body	7067A1115	
S4WRDDG120	Source 4WRD II Daylight Gallery (90+ CRI), Retrofit Kit, 120 V	7067A1116	
S4WRDDG120FB	Source 4WRD II Daylight Gallery (90+ CRI), Retrofit Kit, 120 V - w/ Fixture Body	7067A1117	
S4WRDT230	Source 4WRD II Retrofit Kit, 230 V	7067A1200	
S4WRDG230	Source 4WRD II Gallery (90+ CRI) Retrofit Kit, 230 V	7067A1201	
S4WRDDG230	Source 4WRD II Daylight Gallery (90+ CRI) Retrofit Kit, 230 V	7067A1202	

For White please add -1 to the Model / Part Number.

PRODUCT SPECIFICATIONS

Source

LED details	S4WRD II LED
Max lumens (3200 K / 3200 K Gallery / Daylight Gallery)	11,430 / 9,716 / 10,333
Lumens per watt (3200 K / 3200 K Gallery / Daylight Gallery)	120 V: 76.2 / 64.8 / 68.9 230 V: 65.3 / 55.5 / 59.0
L70 rating (hours to 70% output)	>45,000 hours

Color

Colors used	Warm or Cool White
Color temperature range	3200 K 80 or 90+ CRI, 5900 K 90+ CRI
Calibrated array	N/A
Red shift	No

Optical

Field angle range	Swappable lens tubes between 5–90 degrees
Gate size	79 mm
Aperture size	Lens dependent
Pattern projection	Yes
Pattern size	A or B (see manual)
Camera flicker control/ Hz range	No, not PWM dimmed

Control

Input method	DMX Control or Line Dimmed
Protocols	DMX / RDM via RJ45
Modes (Footprint)	1 Channel (Intensity) for DMX
RDM configuration	Yes
UI type	7-segment address display, local level control via UI
Local control	Yes
Onboard presets	No
Onboard sequences	No
Onboard effects	No
Fixture to fixture control	No

Electrical

Voltage range	114–125 V, 60 Hz (120 V) 209–252 V, 50/60 Hz (230 V)
Input method	Hard-wired, 1 m cord, Edison plug (120 V) Hard-wired, 1 m cord, bare end (230 V)
Inrush	30 A (first half-cycle) at 120 V 12 A (first half-cycle) at 230 V
Fixtures per circuit	120 V: 14 (20 A switched circuit, R20 module or similar) 230 V: 6 fixtures per non-dimmed circuit (ER15AFR module)
Wattage (Typical/ Standby)	150 W / 1.2 W (120 V) 175 W / 3.7 W (230 V)
Current draw	1.26 A at 120 V 0.75 A at 230 V
Notes	- When using line dimming, see the S4WRD manual for dimmer setup. - When using line dimming, standby power is 0 W.

Thermal

Ambient operating temp	5°–50° C (41°–122° F)
Fan (controllable)	Yes (no)
Droop compensation	No
dB range	28 dBa (average at 1 m)
BTUs/hour	529 (120 V) 597 (230 V)

Physical

Materials	Die-cast aluminum
Color options	Black, white, or custom color
Mounting options	Yoke
IP rating	IP-20, indoor only
Weight	3.73 lb (1.69 kg) (Retrofit only)
Included accessories	Source 4WRD mounting post

Warranty

Retrofit kit	Three years

Regulatory and Compliance

Approved regulatory standards	UL 1573 (complete luminaire) UL 1598C (retrofit kit) CSA C22.2 No. 166 (complete luminaire) CSA TIL B79-A (retrofit kit) CE Compliant

PRODUCT FEATURES

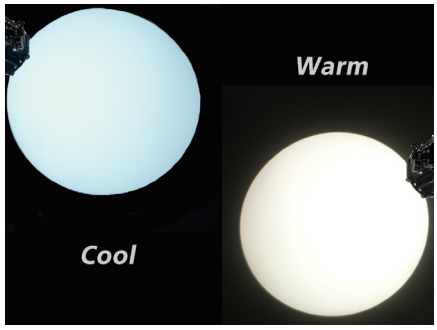

EASY LED RETROFIT
Designed to turn any full size Source Four incandescent fixture into an LED fixture in seconds.

MULTIPLE OPTIONS
Available in both 3200 K and 5900 K color temperatures.

IMPRESSIVE OUTPUT
As bright or brighter than most HPL lamps.

COLOR METRIC INFORMATION

SOURCE 4WRD II 3200 K TM-30-18 - 80CRI

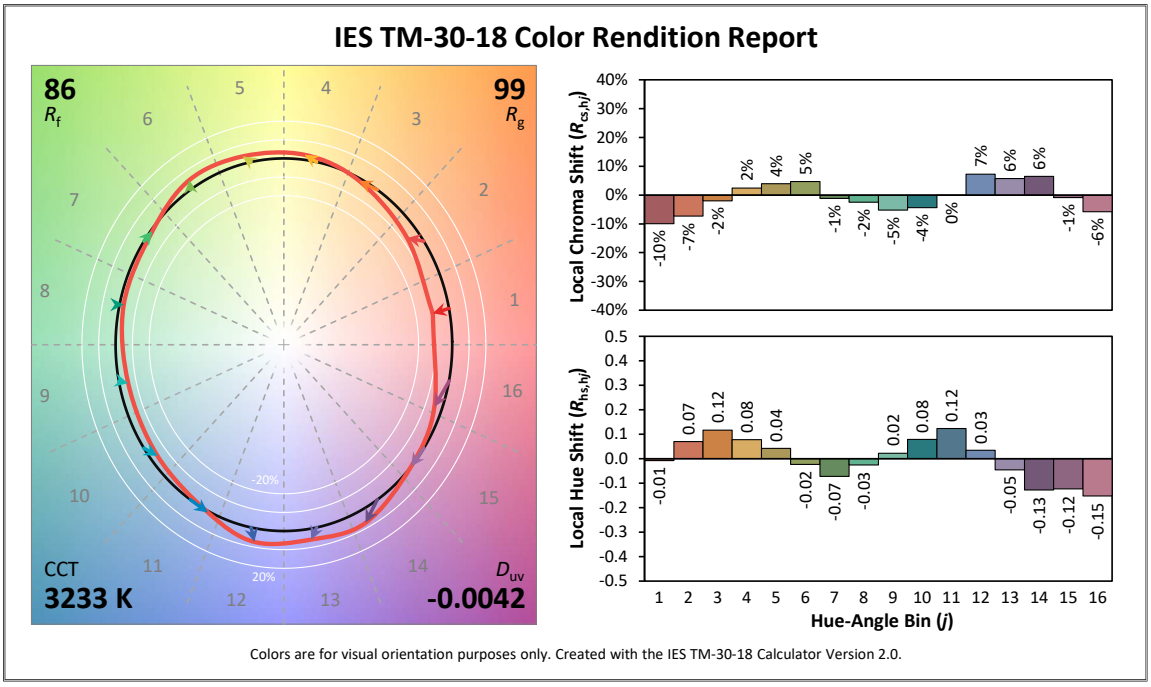

COLOR METRIC INFORMATION

SOURCE 4WRD II GALLERY 3200 K 90CRI

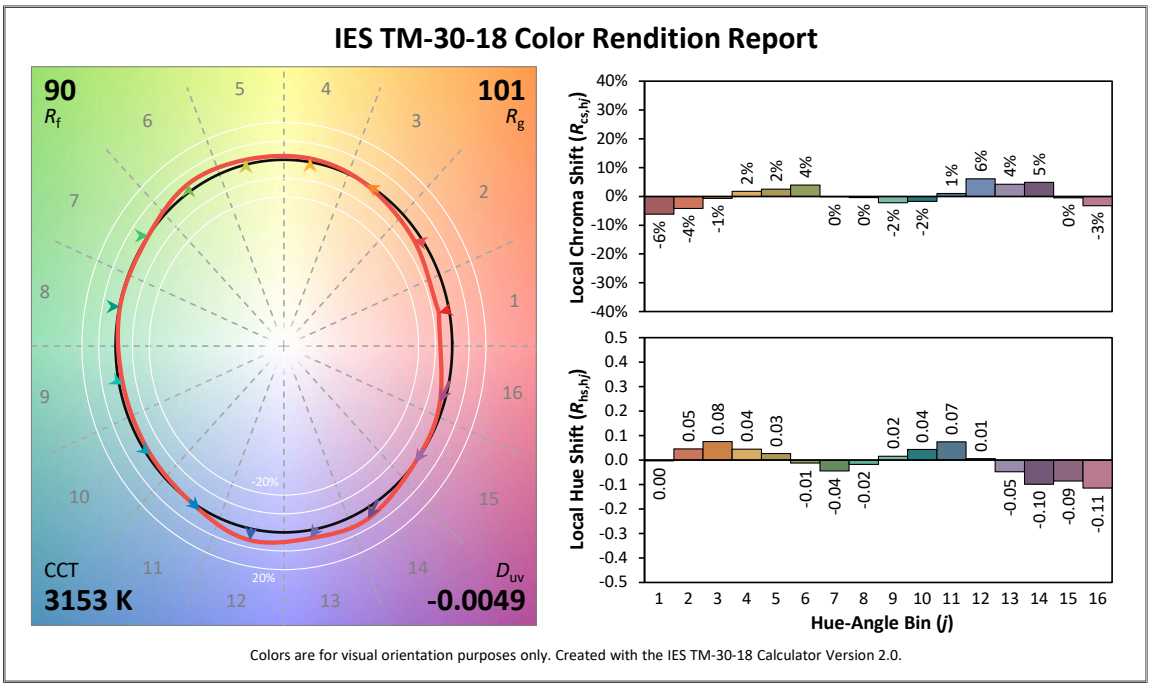

SOURCE 4WRD II DAYLIGHT GALLERY 5900 K 90CRI

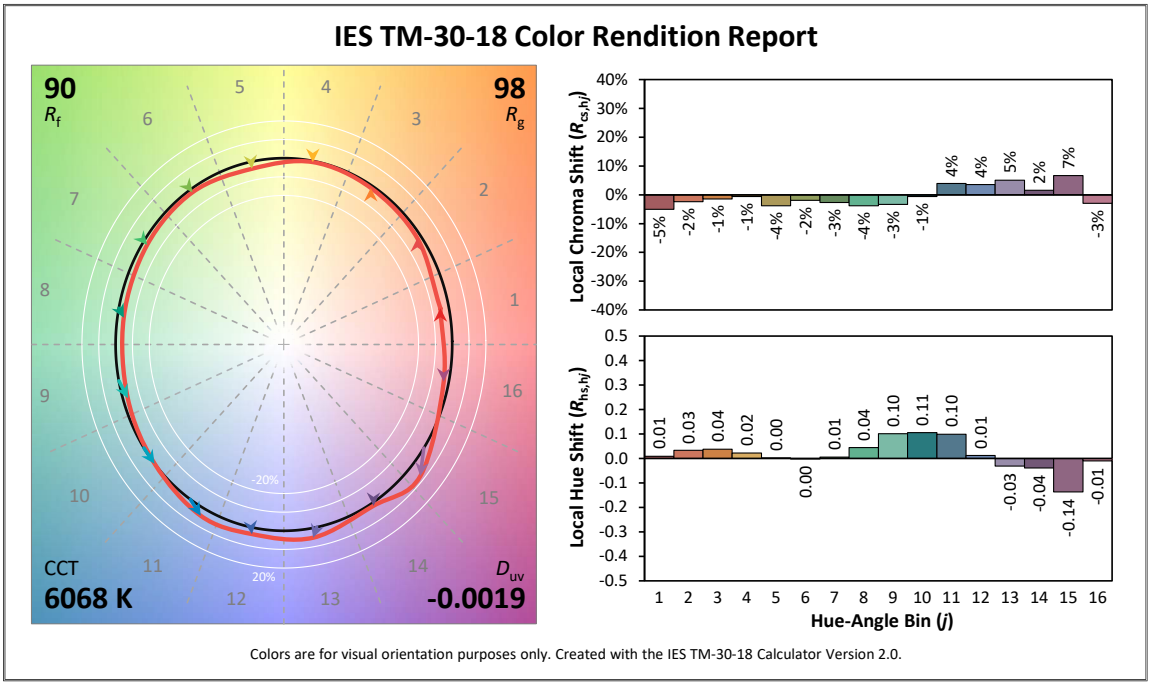

Additional Color Metrics

	STANDARD	GALLERY	DAYLIGHT GALLERY
CRI R_a (R_g)	81 (9)	92 (59)	93 (73)
TLCI	66	92	95

PHOTOMETY INFORMATION

For full Source 4WRD II photometry data, please view the Source 4WRD II Photometry Guide at etcconnect.com.

DEGREE	S4WRD II LED	S4WRD II LED GALLERY	S4WRD II LED DAYLIGHT GALLERY	HPL 575 W / 120 V	HPL 750 W / 115 V	HPL 400 HR 575 W / 230 V	HPL 300 HR 750 W / 230 V
5	6,977	5,930	6,307	5,247	9,370	5,554	7,028
10	8,243	7,007	7.452	6,678	11,925	4,979	8,944
14	8,594	7,305	7,769	7,196	12,850	7,839	9,638
19	7,763	6,599	7,018	6,261	11,180	6,820	8,385
19 EDLT	9,077	7,715	7,497	7,287	13,012	7,937	9,759
26	8,941	7,600	8,083	7,666	13,690	8,351	10,268
26 EDLT	11,430	9,716	10,333	8,631	15,412	9,401	11,559
36	10,644	9,047	9,622	7,974	14,240	8,686	10,680
36 EDLT	10,793	9,174	9,757	7,992	14,271	8,705	10,703
50	10,281	8,739	9,294	7,829	13,980	8,528	10,485
50 EDLT	10,199	8,669	9,220	8,085	14,437	8,807	10,828
70	11,929	10,140	10,784	9,033	16,130	9,839	12,098
90	11,953	10,160	10,806	7,395	13,205	8,055	9,904

ORDERING INFORMATION

Continued from front page...

Source Four Accessories

MODEL	DESCRIPTION	CE PART NUMBERS
400PH-A	Pattern holder (A size)	7060A1013
400PH-B	Pattern holder (B size)	7060A1014
400PH-G	Glass pattern holder	7060A1019
400SC	Safety cable	7060A1022
400RS	Drop-in iris	7060A1012
400CF	Colorframe (160 mm / 6.25 in)	7060A3043
400DN	Donut (160 mm / 6.25 in)	7060A1015
400TH	Top hat	PSF1021
400HH	Half hat	PSF10216
407CF	7.5 in Square color frame (required for 14°, 70°, 90° and 407GE)	7061A3007
400FB	Source Four fixture body, single clutch	7060A1099
S4WRDACCKIT	Data Accessory Kit, Includes W6538, W6539 & N4086	7067K1001
W6538	RJ45 to Female 5-pin XLR adapter	W6538
W6539	RJ45 to Male 5-pin XLR adapter	W6539
N4086	RJ45 DMX Terminator	N4086

Note: For colors other than black or white, please call ETC.

Lens Tubes

MODEL	DESCRIPTION	CE PART NUMBERS
490LT	90° Lens tube with lens installed, Black	7060A2052-K
470LT	70° Lens tube with lens installed, Black	7060A2051-K
450LT	50° Lens tube with lens installed, Black	7060A2205-K
436LT	36° Lens tube with lens installed, Black	7060A2204-K
426LT	26° Lens tube with lens installed, Black	7060A2203-K
419LT	19° Lens tube with lens installed, Black	7060A2202-K
414LT	14° Lens tube with lens installed, Black	7060A2050-K
410LT	10° Lens tube with lens installed, Black	7060A2001-K
405LT	5° Lens tube with lens installed, Black	7060A2000-K
450EDLT	50° EDLT Lens tube with lens installed, Black	7060A2049
436EDLT	36° EDLT Lens tube with lens installed, Black	7060A2048
426EDLT	26° EDLT Lens tube with lens installed, Black	7060A2047
419EDLT	19° EDLT Lens tube with lens installed, Black	7060A2046

PHYSICAL

Source 4WRD II Dimensions (120 V and 230 V)

MODEL	HEIGHT		WIDTH		DEPTH	
	in	mm	in	mm	in	mm
S4WRDT/S4WRDTG/S4WRDDG	5.59	142	7.00	178	6.29	160
S4WRDFB/S4WRDGFB with 26 deg. lens	21.07	535	13.36	339	23.76	604

Source 4WRD II Weights* (120 V and 230 V)

MODEL	WEIGHT		SHIPPING WEIGHT	
	lb	kg	lb	kg
S4WRDT/S4WRDTG/S4WRDDG	3.73	1.69	4.25	1.93
S4WRDFB/S4WRDGFB (no lens)	13.20	5.99	14.00	6.35

*Source 4WRD II adds 0.93 kg (2.05 lb) to the total fixture weight over a standard burner assembly.

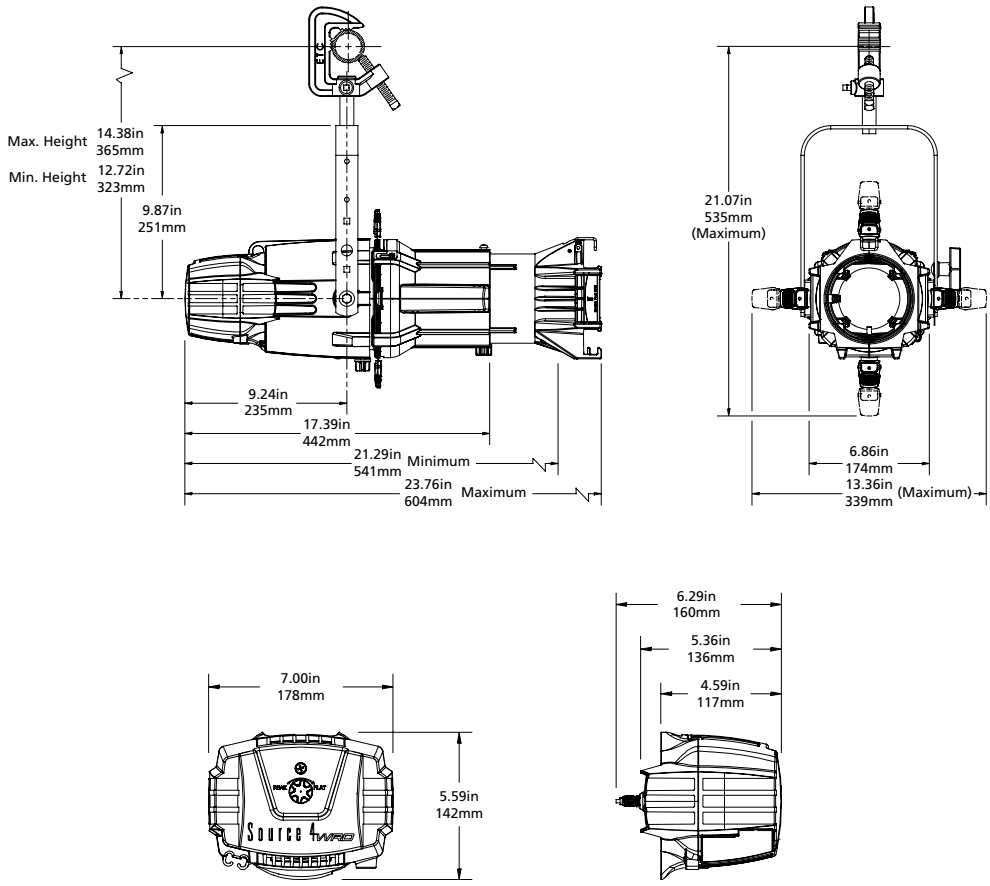

Corporate Headquarters ▪ Middleton, WI USA
Global Offices ▪ London, UK ▪ Rome, IT ▪ Holzkirchen, DE ▪ Paris, FR ▪ Hong Kong
Dubai, UAE ▪ Singapore ▪ New York, NY ▪ Orlando, FL ▪ Los Angeles, CA ▪ Austin, TX
Copyright©2022 ETC. All Rights Reserved. All product information and specifications subject to change. Rev E 2022-12
*Trademark and patent info: etcconnect.com/IP

etcconnect.com