Quick Startup Guide

0 0 1 0 8 2 0 2 8

SCUBA Series

LOWARA
a xylem brand

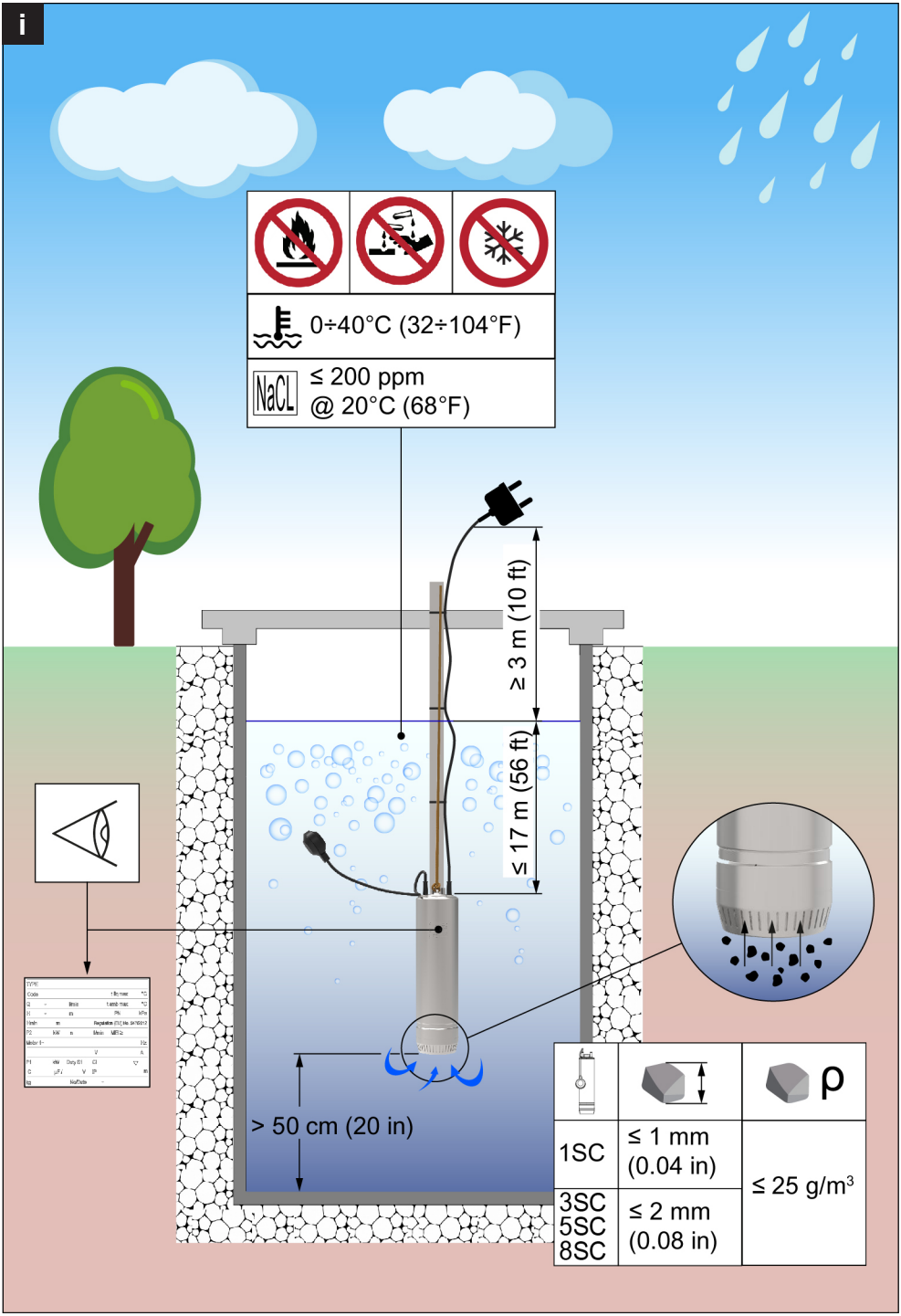
i
0÷40°C (32÷104°F)
NaCL
≤ 200 ppm
@ 20°C (68°F)
≥ 3 m (10 ft)
≤ 17 m (56 ft)
> 50 cm (20 in)
ρ
1SC
≤ 1 mm
(0.04 in)
3SC
5SC
8SC
≤ 2 mm
(0.08 in)
≤ 25 g/m³

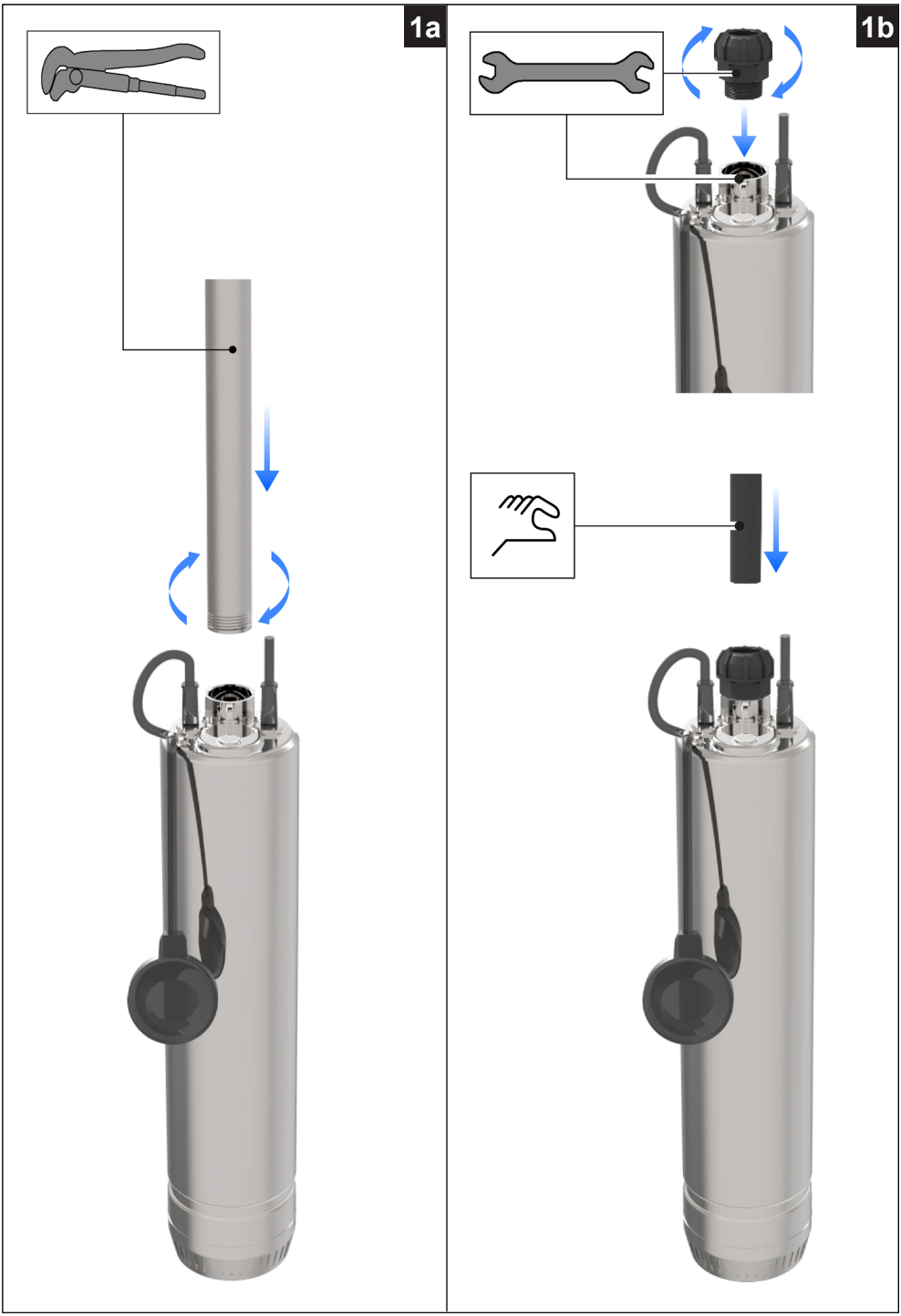
1a
1b

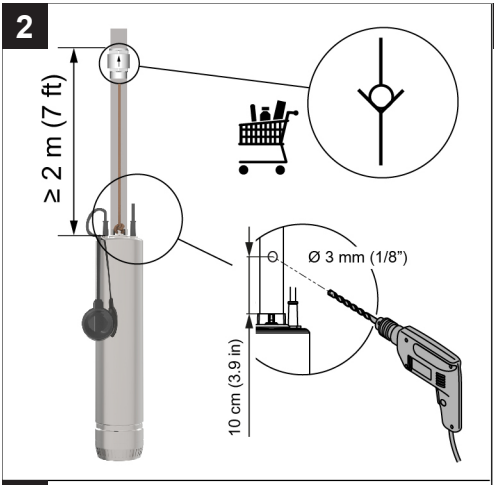
2
≥ 2 m (7 ft)
Ø 3 mm (1/8")
10 cm (3.9 in)

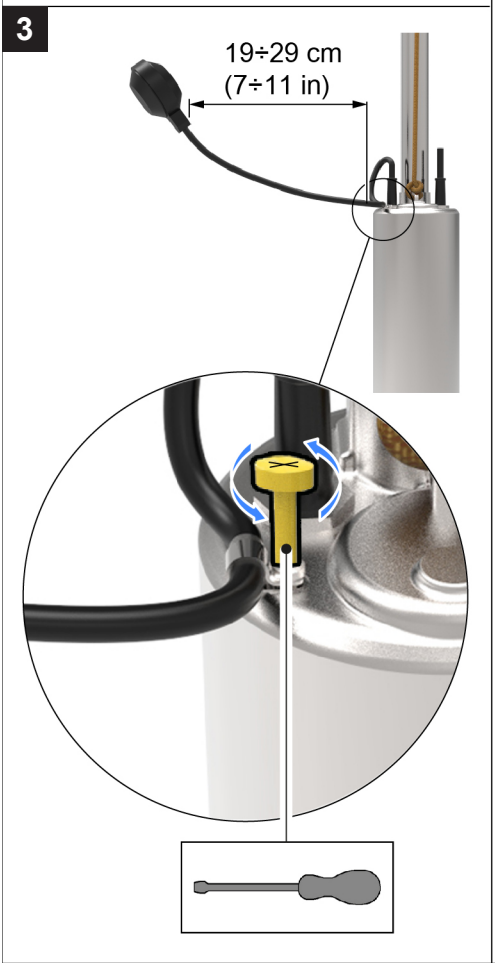
3
19÷29 cm
(7÷11 in)

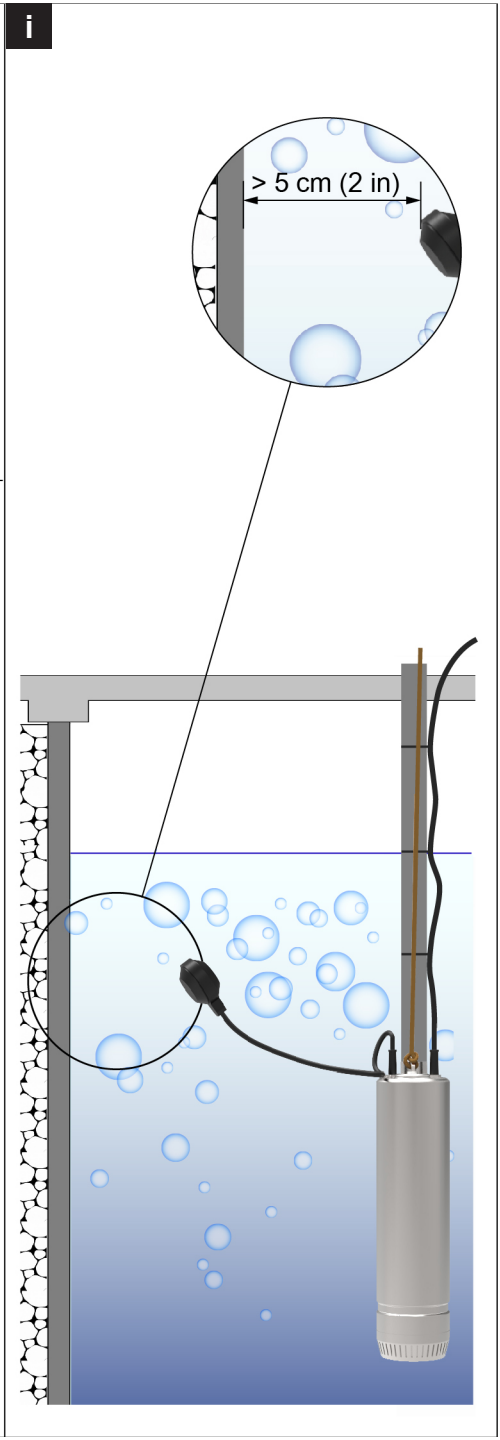
i
> 5 cm (2 in)

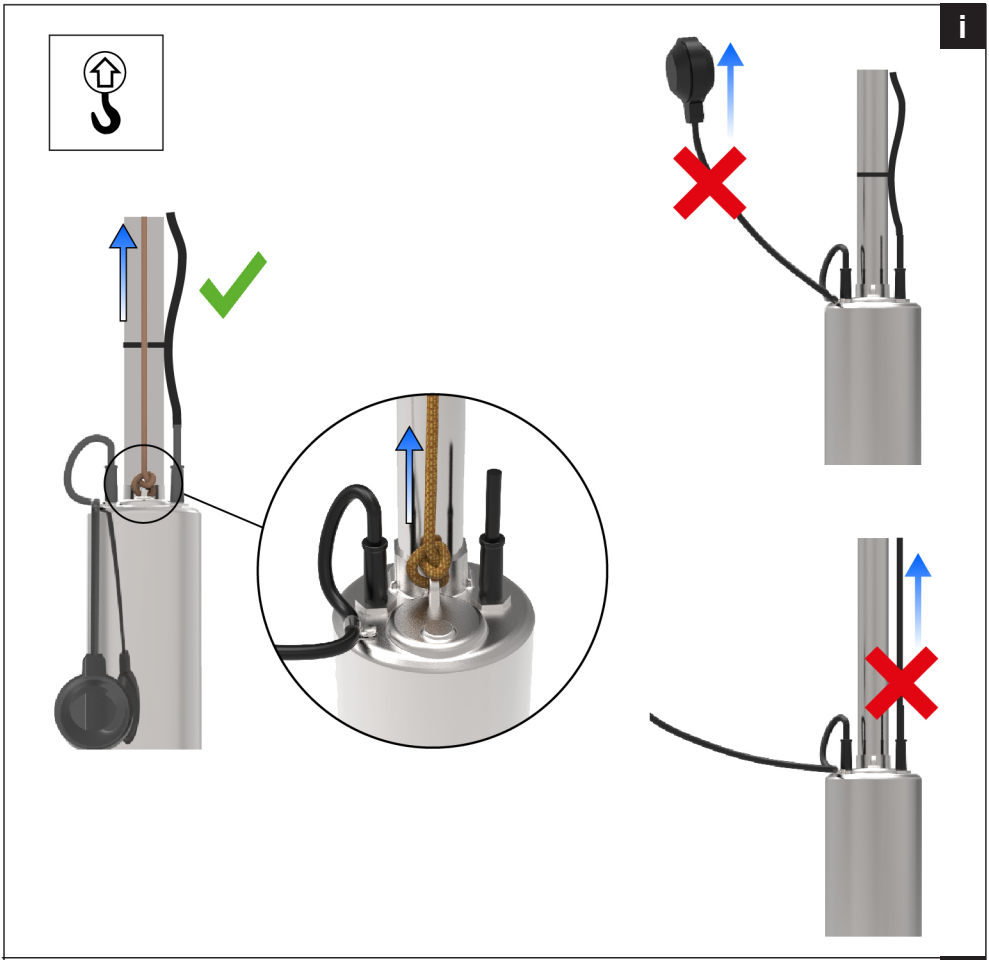
i

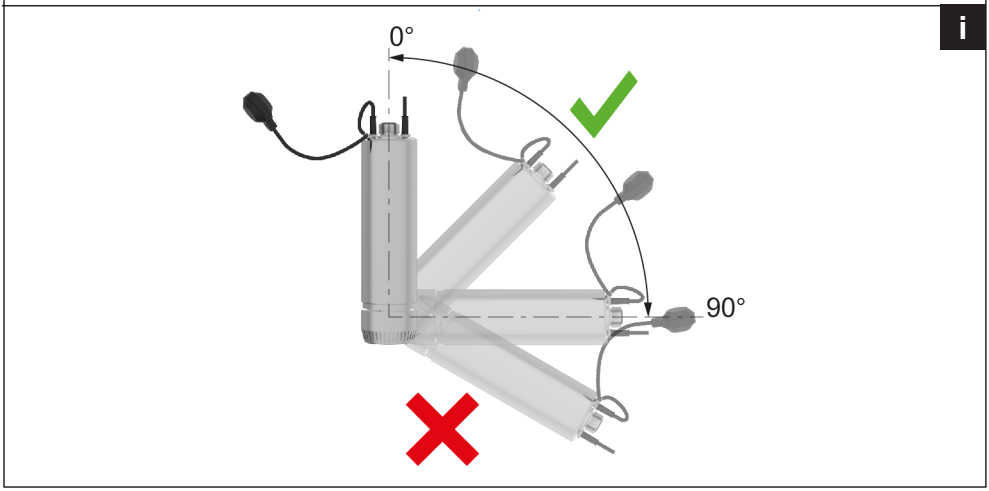
i
0°
90°

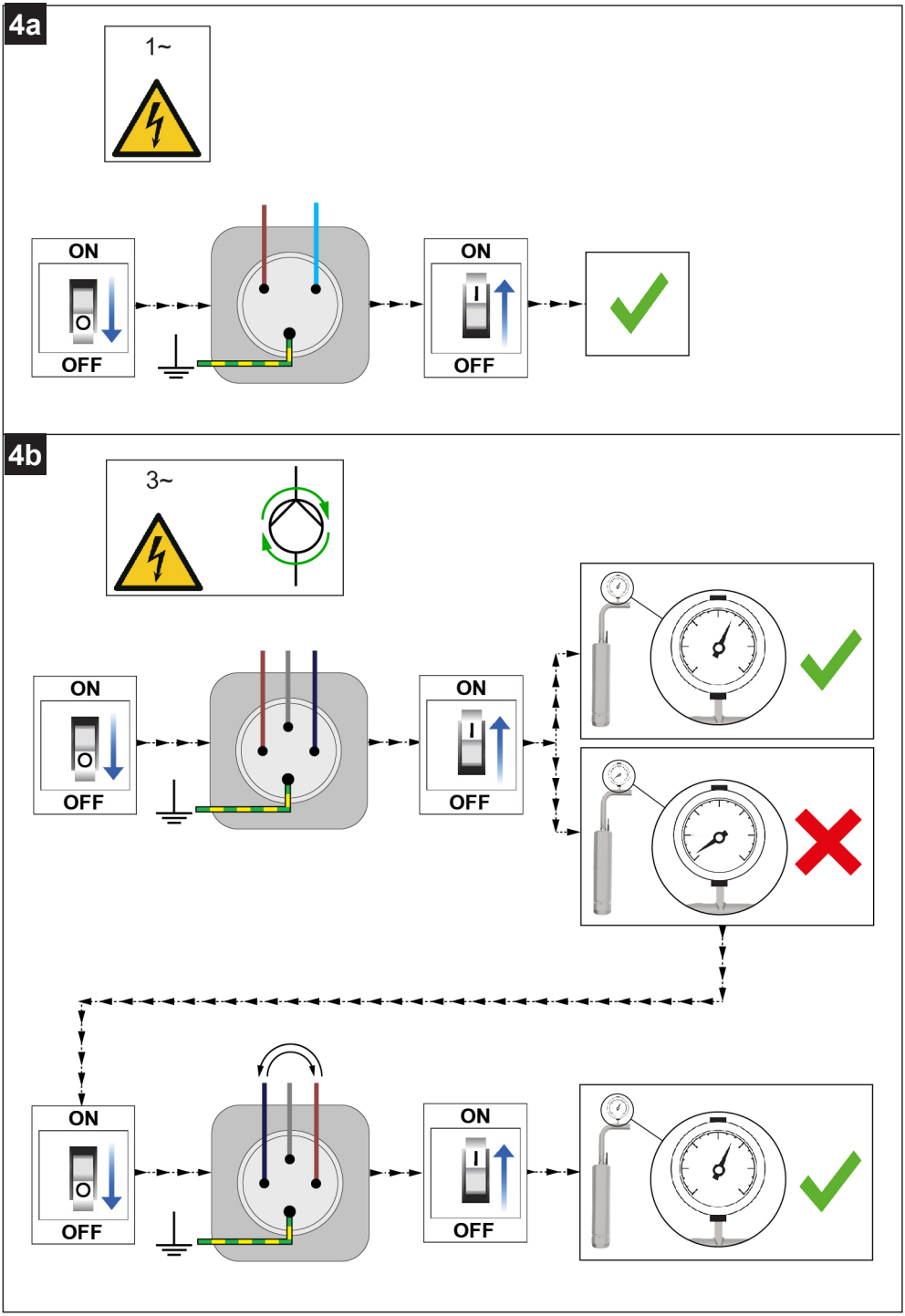
4a
1~
ON
O
OFF
ON
I
OFF
4b
3~
ON
O
OFF
ON
I
OFF
ON
O
OFF
ON
I
OFF

i

http://lowara.com/pumps-circulators/submersible-borehole-pumps/scuba-close-coupled-submersible-pumps/#product-tab-literature

Xylem |’zīləm|

Xylem Service Italia S.r.l.
Via Vittorio Lombardi 14
Montecchio Maggiore (VI) 36075
Italy

© 2018 Xylem, Inc.

Cod.001082028 rev.B ed.03/2019