T-stuk 45° + deksel EK

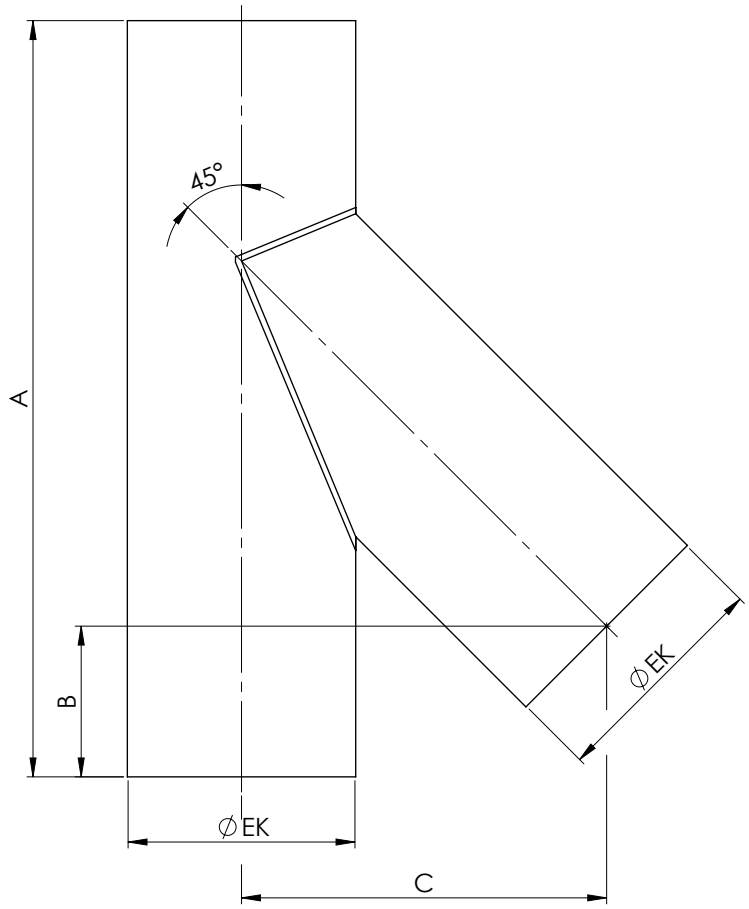

EK	MATEN			ARTIKELCODE
	A	B	C	
80	400	75	182	EK080007
100	500	82	199	EK100007
110	500	86	207	EK110007
120	500	89	216	EK120007
125	500	91	220	EK125007
130	500	93	224	EK130007
150	500	100	241	EK150007
180	500	110	267	EK180007
200	550	117	284	EK200007
250	650	135	327	EK250007
300	700	153	369	EK300007
350	750	170	412	EK350007
400	850	188	455	EK400007

07.04.2022
REV: 0

Thermo Products
rookgasafvoersystemen

Thermo Products B.V.
Bedrijfsweg 14
4387PD Vlissingen
www.thermoproducts.nl