PARTS MANUAL

SERIES 2300 DRYWALL/HVAC LIFT

SUMNER*

A Southwire Company

USA • 7514 Alabonson Road • Houston, TX 77088 • Ph: 281-999-6900 • Fax: 281-999-6966
Canada • 75 Saltsman Drive, Unit 5 • Cambridge, ON N3H 4R7 • Ph: 519-653-5300 • Fax: 519-653-5305
Netherlands • Midden Engweg 21 • NL-3882TS Putten • Netherlands • +31 (0) 6 13147979

DRYWALL LIFT ASSEMBLY

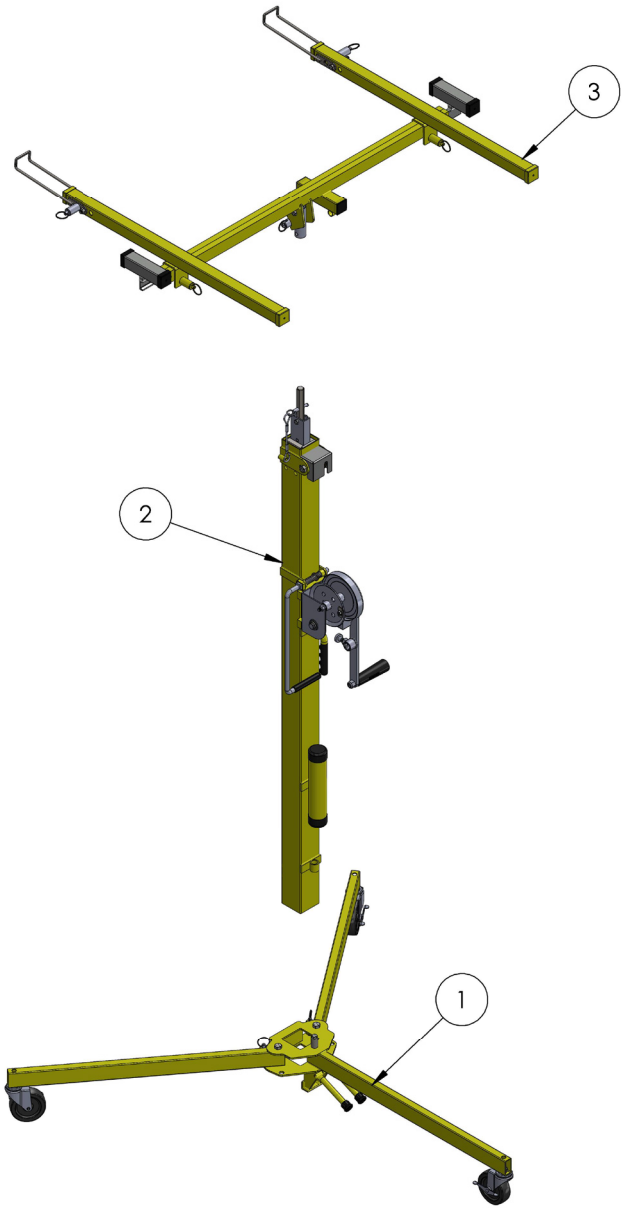

ITEM NO.	PART NUMBER	DESCRIPTION	QTY.
1	784420	BASE ASSEMBLY DRYWALL LIFT	1
2	784352	MAST ASSEMBLY 2315 S/N	1
3	784355	DRYWALL CRADLE ASSEMBLY	1

HVAC/ELECTRICAL LIFT ASSEMBLY

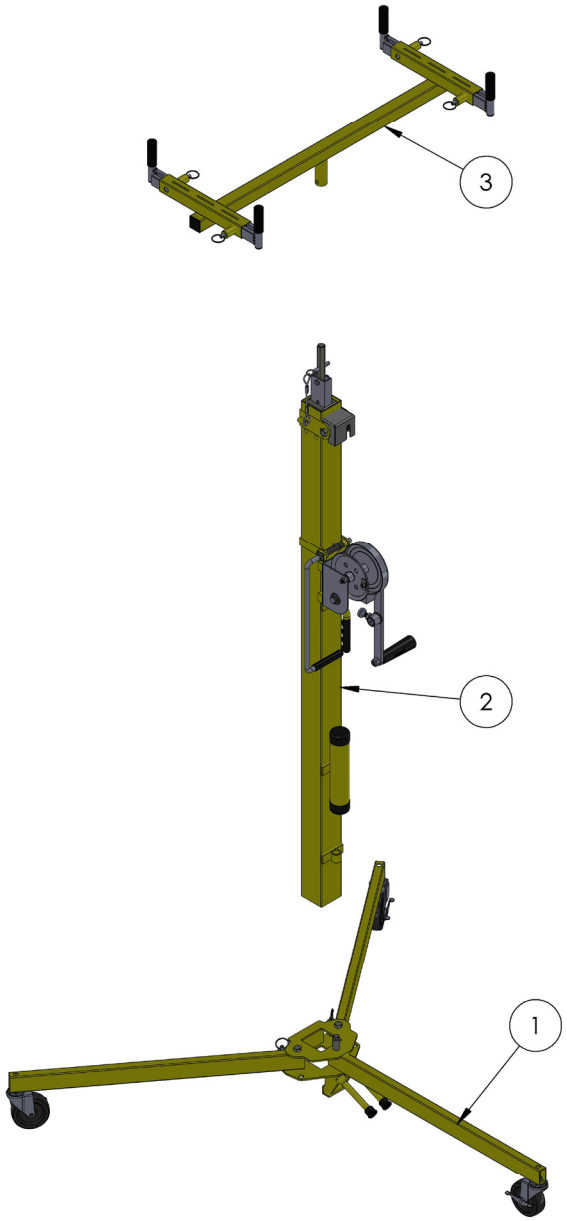

ITEM NO.	PART NUMBER	DESCRIPTION	QTY.
1	784420	BASE ASSEMBLY DRYWALL LIFT	1
2	784352	MAST ASSEMBLY 2315 S/N	1
3	784474	HVAC/ELECTRICAL CRADLE ASSY	1

MAST ASSEMBLY

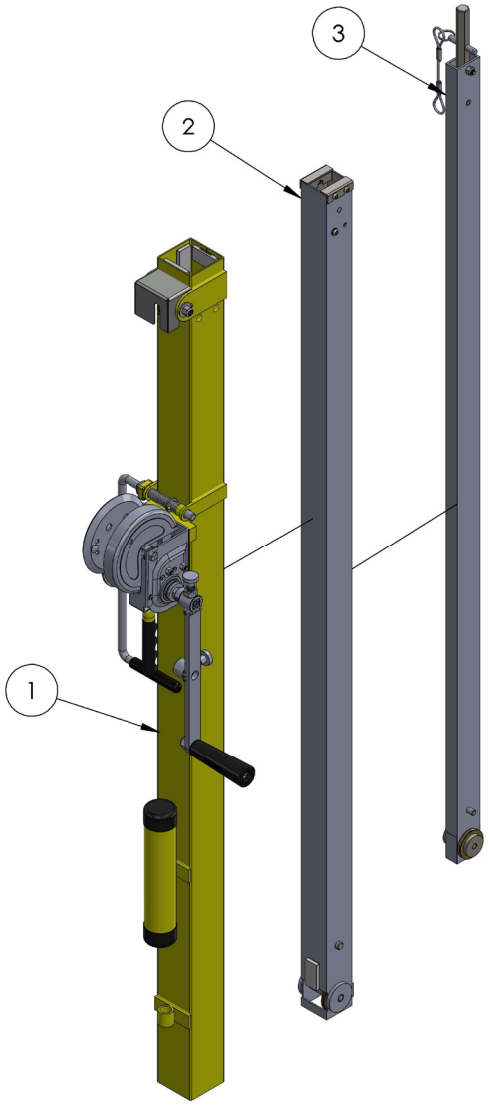

ITEM NO.	PART NUMBER	DESCRIPTION	QTY.
1	784455	OUTER MAST ASSEMBLY 2315	1
2	784457	CENTER MAST ASSEMBLY 2315	1
3	784459	TOP MAST ASSEMBLY 2315	1
4	784460	LOAD LINE 2315 (23.75 FT.)	1

DRYWALL LIFT - CRADLE ASSEMBLY

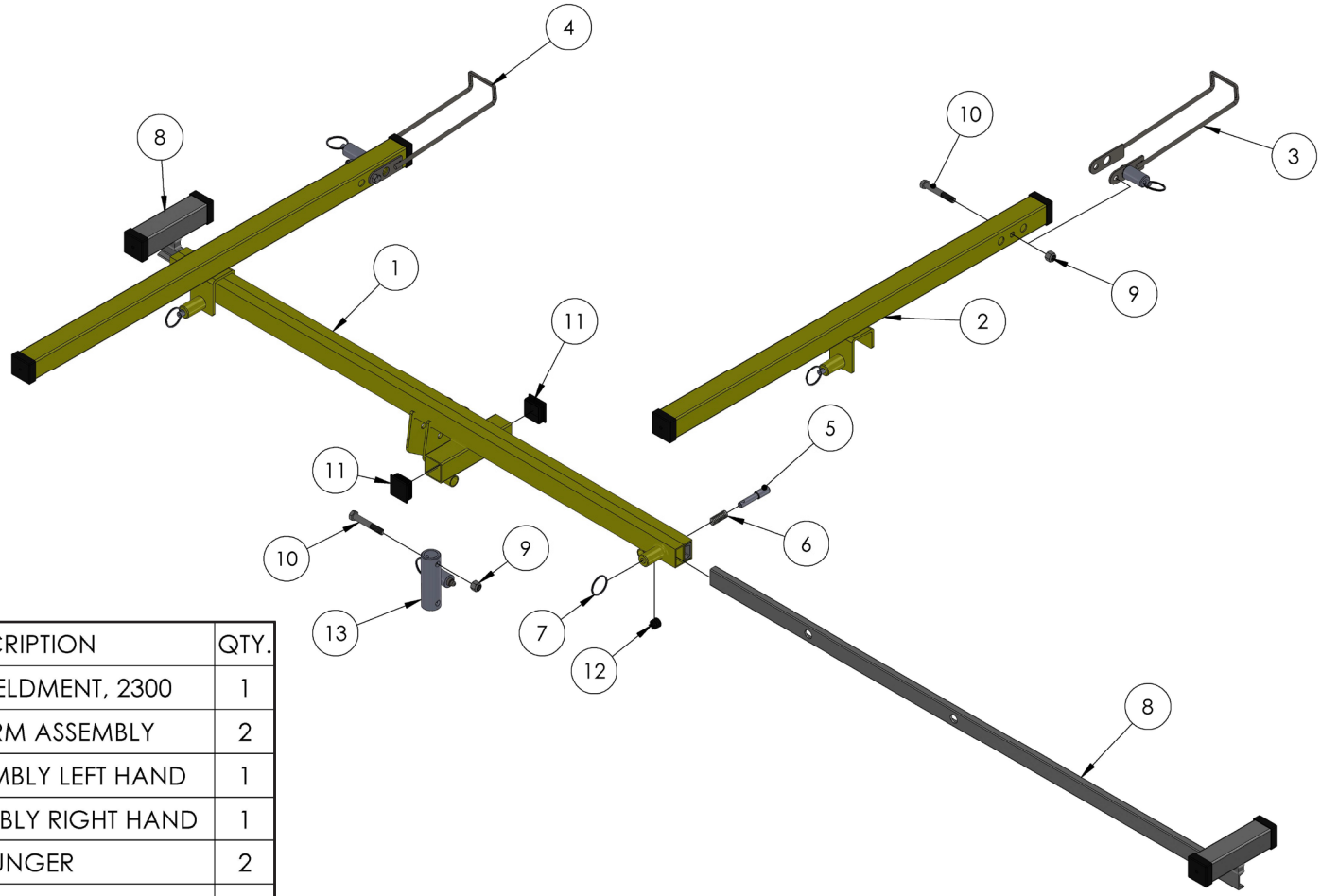

ITEM NO.	PART NUMBER	DESCRIPTION	QTY.
1	784365	CRADLE WELDMENT, 2300	1
2	784376	CROSS ARM ASSEMBLY	2
3	784372	HOOK ASSEMBLY LEFT HAND	1
4	784373	HOOK ASSEMBLY RIGHT HAND	1
5	782510	PLUNGER	2
6	776212	SPRING, #DWC - 042 - G - 9	2
7	775110	SPLIT RING 1-1/4" NICKLE PLATED	2
8	784381	RAIL ASSEMBLY	2
9	772355	NUT, INSERT LOCK 3/8-16	3
10	771110	SCREW, HHC 3/8-16 X 2.5"LN	3
11	779924	CAP, 1-1/2" SQUARE TUBE, BLK	2
12	774023	PLUG, ROUND .459-.575 ID TUBE	2
13	784401	CRADLE MOUNT ASSEMBLY	1

CROSS ARM ASSEMBLY

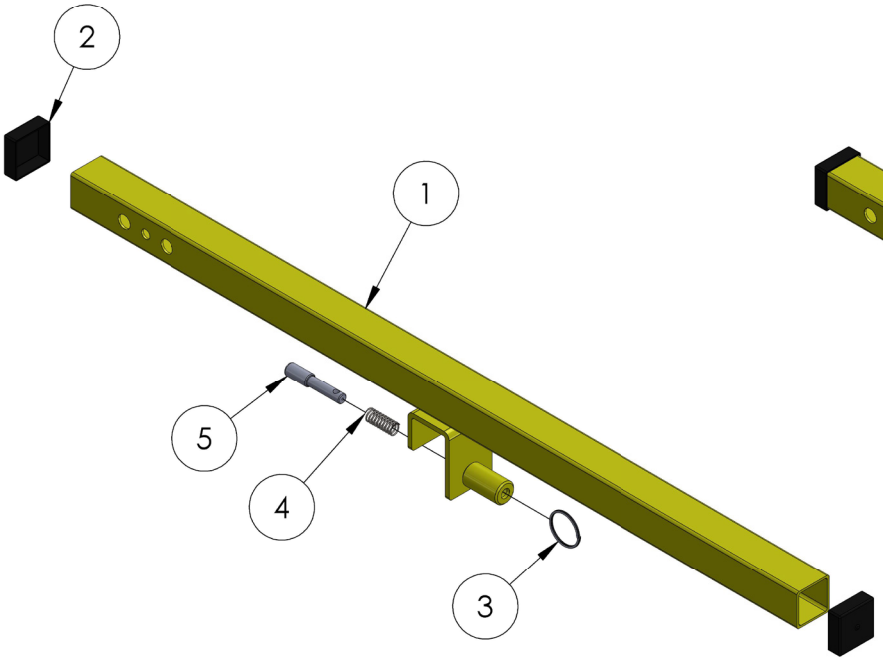

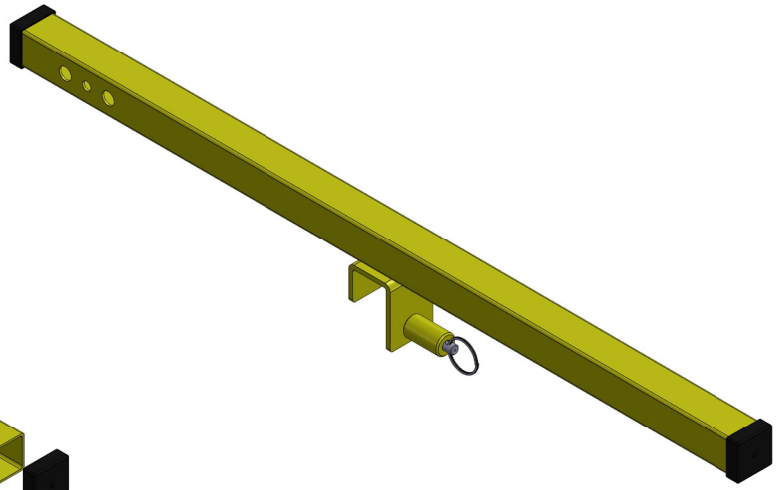

ITEM NO.	PART NUMBER	DESCRIPTION	QTY.
1	784375	CROSS ARM WELDMENT, 2300	1
2	779629	ENDCAP SQ 1-1/2 X 1-1/2	2
3	775110	SPLIT RING 1-1/4" NICKLE PLATED	1
4	776212	SPRING, #DWC - 042 - G - 9	1
5	782510	PLUNGER	1

RAIL ASSEMBLY

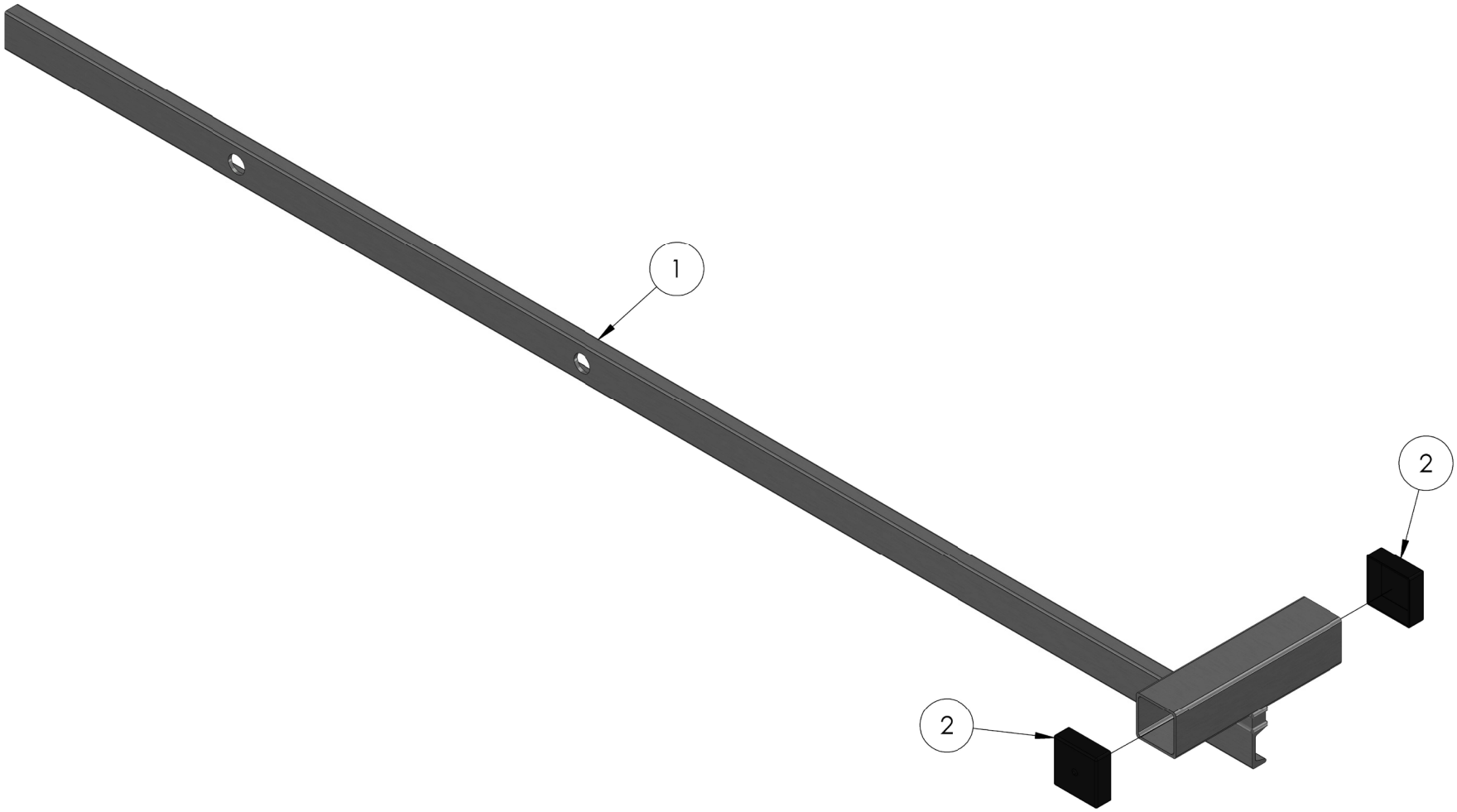

ITEM NO.	PART NUMBER	DESCRIPTION	QTY.
1	784380	RAIL WELDMENT	1
2	779629	ENDCAP SQ 1-1/2 X 1-1/2	2

CRADLE MOUNT ASSEMBLY

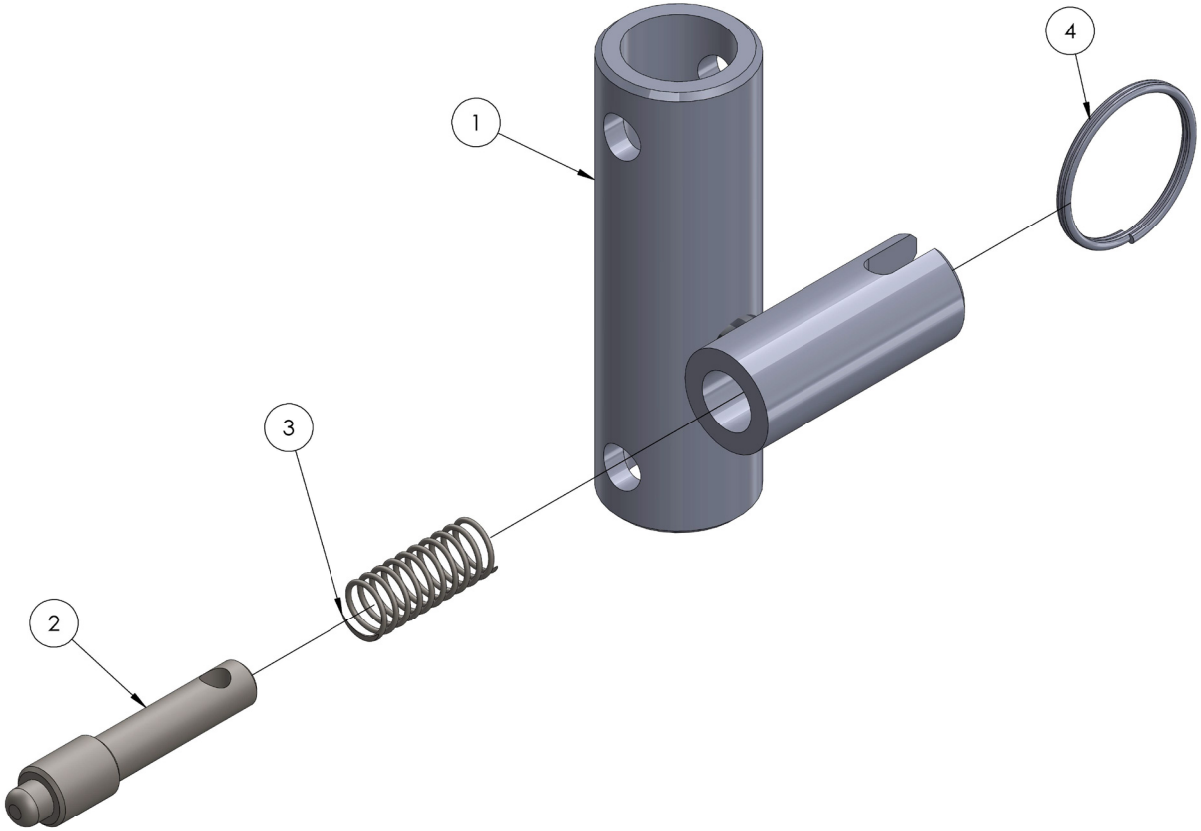

ITEM NO.	PART NUMBER	DESCRIPTION	QTY.
1	784384	CRADLE MOUNT WELDMENT	1
2	783342	PLUNGER	1
3	776212	SPRING, #DWC - 042 - G - 9	1
4	775110	SPLIT RING 1-1/4" NICKLE PLATED	1

BASE ASSEMBLY

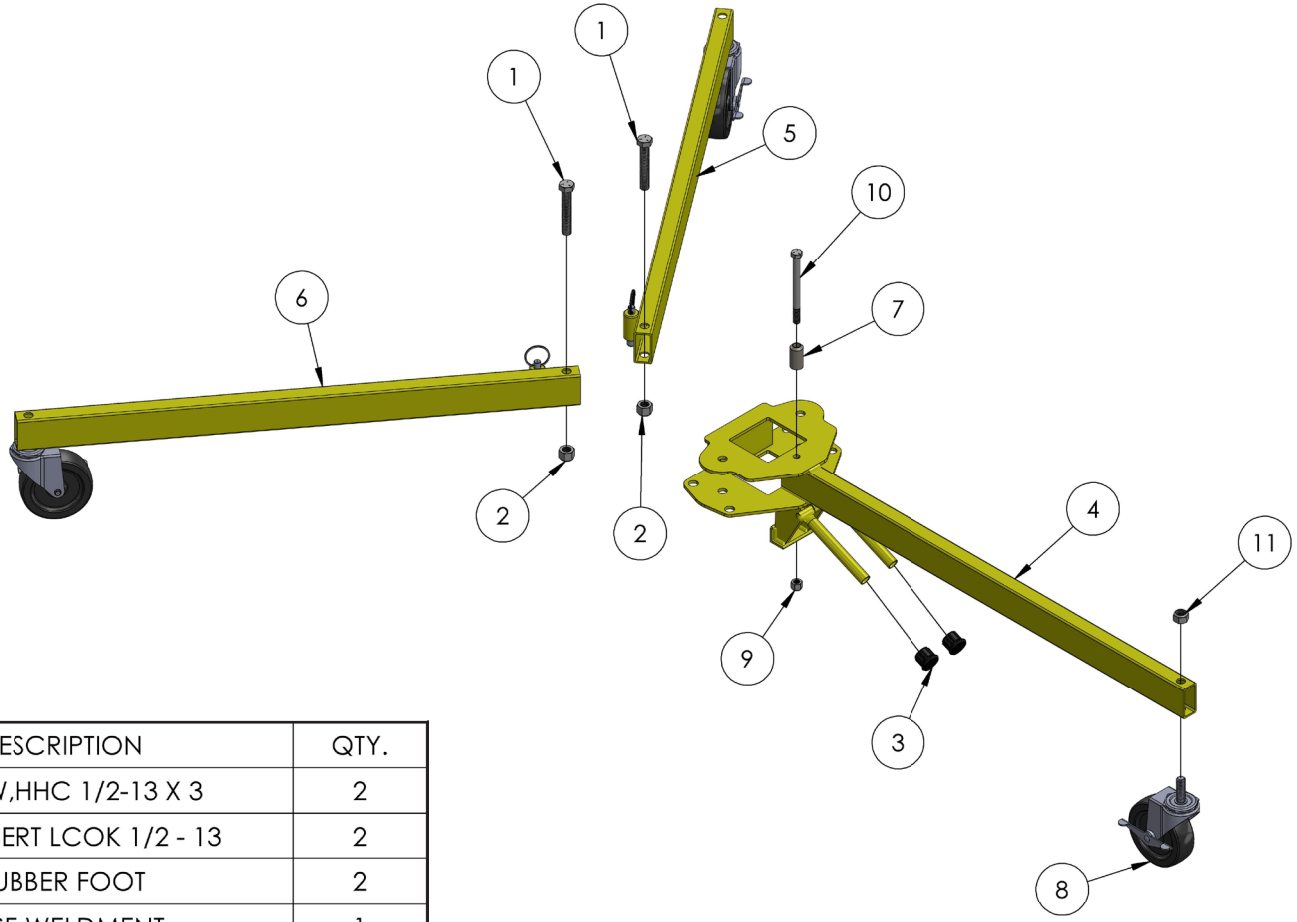

ITEM NO.	PART NUMBER	DESCRIPTION	QTY.
1	771142	SCREW,HHC 1/2-13 X 3	2
2	772357	NUT, INSERT LCOK 1/2 - 13	2
3	779033	RUBBER FOOT	2
4	784415	BASE WELDMENT	1
5	784424	LEG ASSEMBLY RIGHT	1
6	784426	LEG ASSEMBLY LEFT	1
7	784439	MAST LOCATOR	1
8	779032	CASTER, 100 X 32 M12 X 25mm	1
9	772355	NUT, INSERT LOCK 3/8-16	1
10	771245	SCREW, HHC 3/8-16 X 4-1/2	1
11	772801	NUT, HEX 12MM ZINC PLATED	1

RIGHT LEG ASSEMBLY

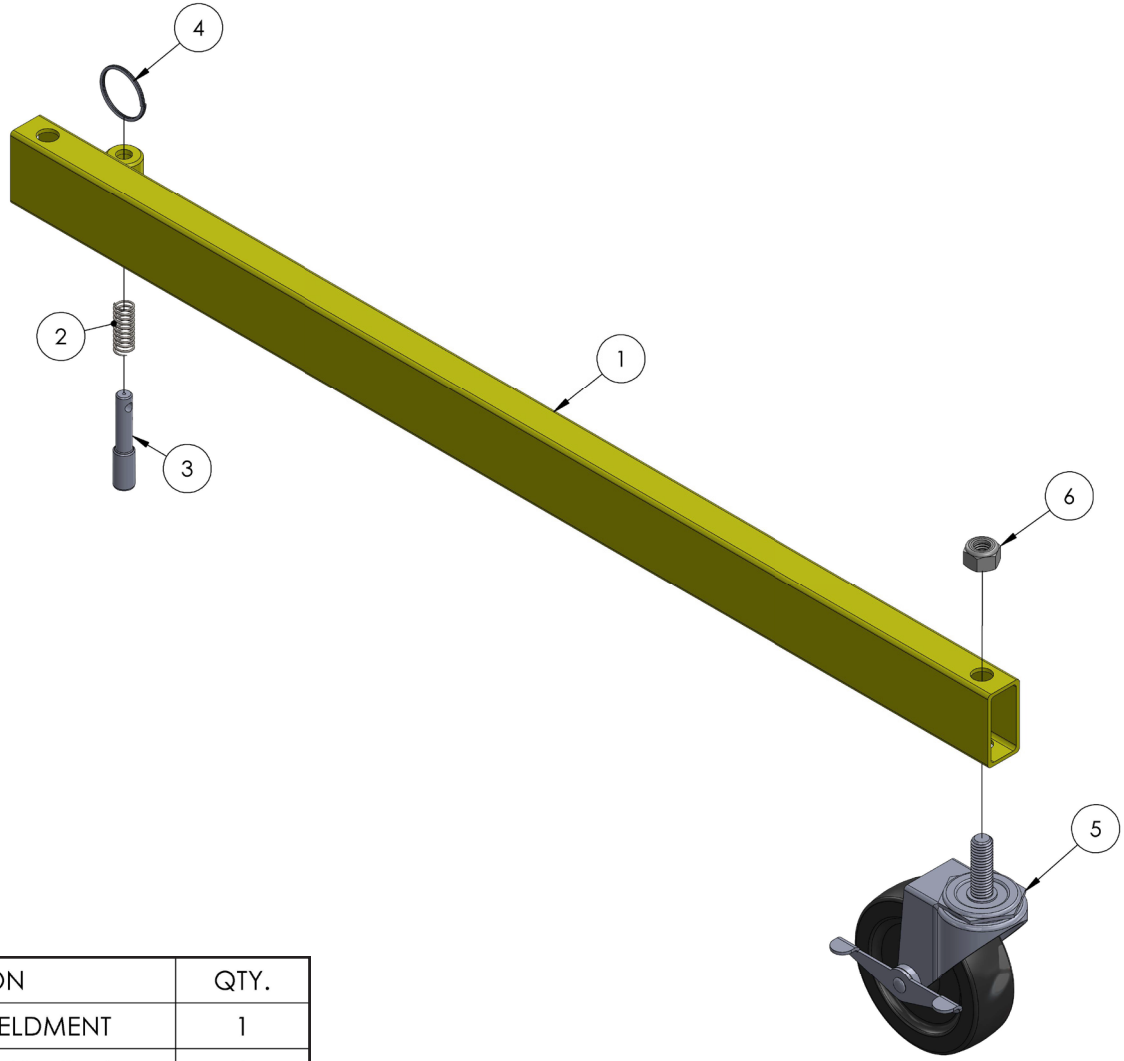

ITEM NO.	PART NUMBER	DESCRIPTION	QTY.
1	784423	LEFT HAND LEG WELDMENT	1
2	776212	SPRING, #DWC - 042 - G - 9	1
3	782510	PLUNGER	1
4	775110	SPLIT RING 1-1/4" NICKLE PLATED	1
5	779032	CASTER, 100 X 32 M12 X 25mm	1
6	772801	NUT, HEX 12MM ZINC PLATED	1

OUTER MAST ASSEMBLY

ITEM NO.	PART NUMBER	DESCRIPTION	QTY.
1	784454	OUTER MAST WELDMENT	1
2	784449	HANDLE WELDMENT	1
3	779114	HAND GRIP FAOM 1/2 X 4 BLACK	1
4	779528	GRIP, HAND (BLACK) (MODEL 1&2)	1
5	779905	CAP, 2" OD TUBE, BLACK	2
6	784670	WINCH ASSEMBLY (EL-405)	1
7	784408	PULLEY GUARD	1
8	784390	PULLEY 2-1/4" BRASS	1
9	784392	SPACER, PULLEY 3/4"	1
10	784447	SPACER, PULLEY 1-3/4"	1
11	771137	SCREW, SHOULDER 1/2X3.5" LN	1
12	772355	NUT, INSERT LOCK 3/8-16	1
13	773040	WASHER, FLAT 3/8"	1
14	776042	SCREW, BHMS #8-32 X 1/2" LN	2
15	773096	WASHER, FLAT M12	1
16	776216	SPRING, CENTURY #71912S	1
17	774095	PIN, ROLL HOLLOW 1/8X1'LN	1
18	784451	WEAR PAD SLOTTED 1 X 2	1
19	784405	WEAR PAD FLAT 1 X 2	3
20	779113	TAPE DOUBLESIDED .020 X 1W	4
21	773575	WASHER, LOCK 3/8"	2
22	771059	SCREW, HHC 3/8-16 X 0.75"LN	2

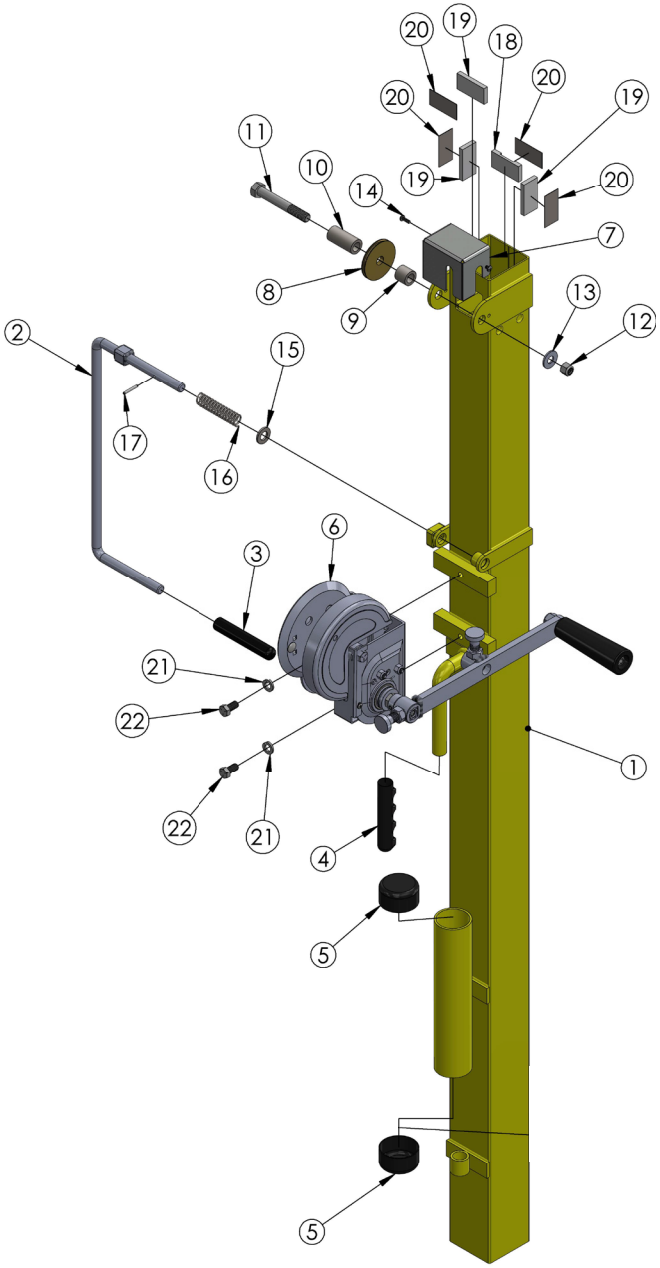

CENTER MAST ASSEMBLY

ITEM NO.	PART NUMBER	DESCRIPTION	QTY.
1	771044	SCREW, BHC 1/4-20 X 3/8	7
2	771138	SCREW, SHC 1/4-20 X 1/4	2
3	773550	1/4" LOCK WASHER	2
4	779113	TAPE DOUBLESIDED .020 X 1W	2
5	784390	PULLEY 2-1/4" BRASS	1
6	784456	CENTER MAST TUBE 2315	1
7	784447	SPACER, PULLEY 1-3/4"	1
8	784399	CENTER MAST PULLEY WELDMENT	1
9	774043	PIN, DOWEL 1/2 X 2-3/4	2
10	784403	TOP COVER	2
11	784404	CENTER MAST WEAR DISC	2
12	784405	WEAR PAD FLAT 1 X 2	1
13	784398	PULLEY BRACKET	1
14	784451	WEAR PAD SLOTTED 1 X 2	1
15	784452	WEAR PAD SLOTTED 5/8 X 2	2
16	776058	TAPE, UHMW .0115 THK. X 1"	2

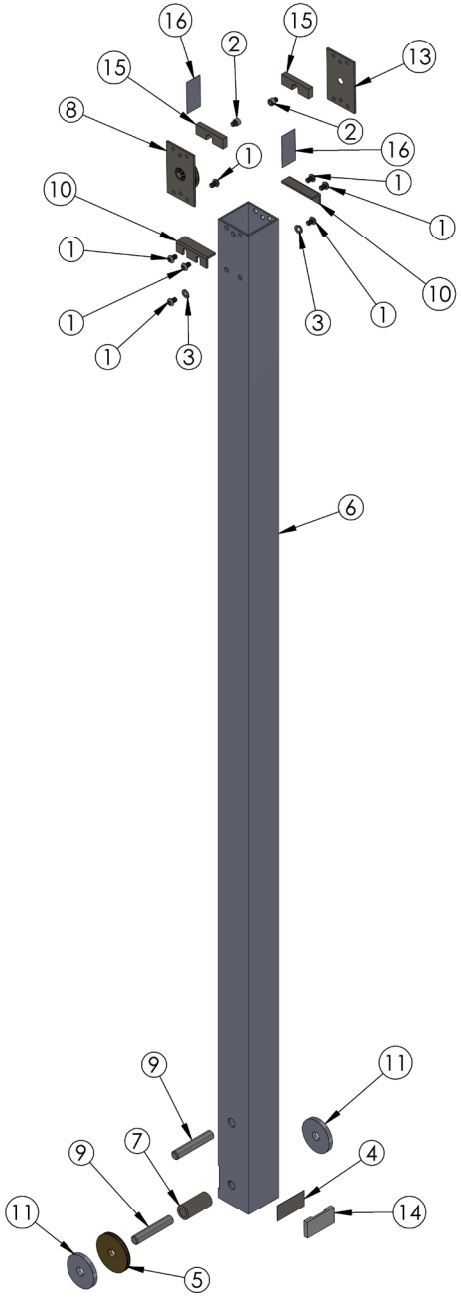

TOP MAST ASSEMBLY

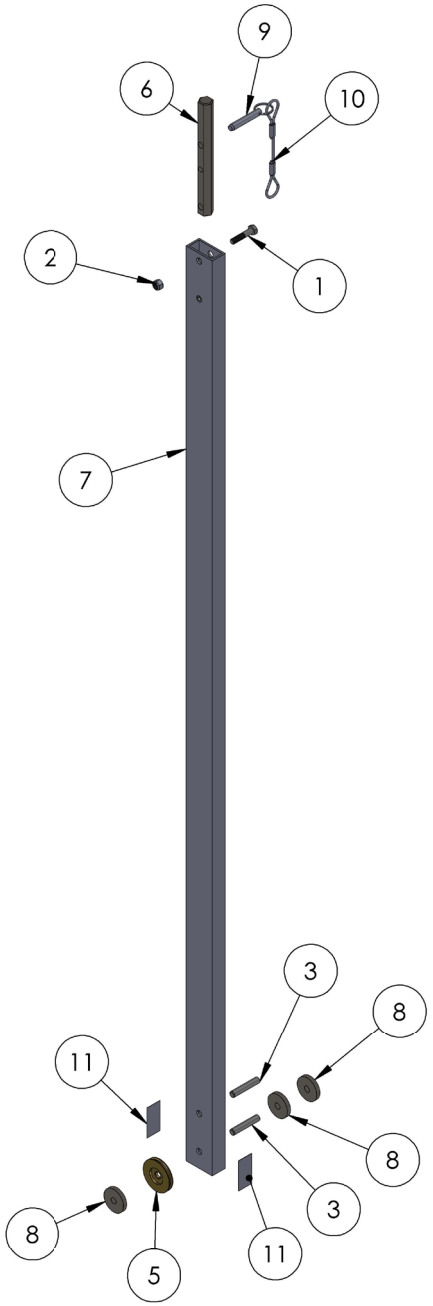

ITEM NO.	PART NUMBER	DESCRIPTION	QTY.
1	771055	SCREW, HHC 5/16-18 X 1.5" LN	1
2	772502	NUT, INSERT JAM 5/16-18	1
3	774041	PIN, ROLL 3/8 X 2.0"LN	2
4	774042	PIN, DOWEL 3/8 X 1.0"LN	1
5	784391	PULLEY, BRASS 2"	1
6	784402	SPINDLE	1
7	784458	TOP MAST TUBE 2315	1
8	784412	TOP MAST WEAR DISC	3
9	779411	PIN DETENT 3/8 X 1.5" LN	1
10	774195	MAST HOLD DOWN (LANYARD)	1
11	776058	TAPE, UHMW .0115 THK. X 1"	2

HVAC/ELECTRICAL LIFT - CRADLE ASSEMBLY

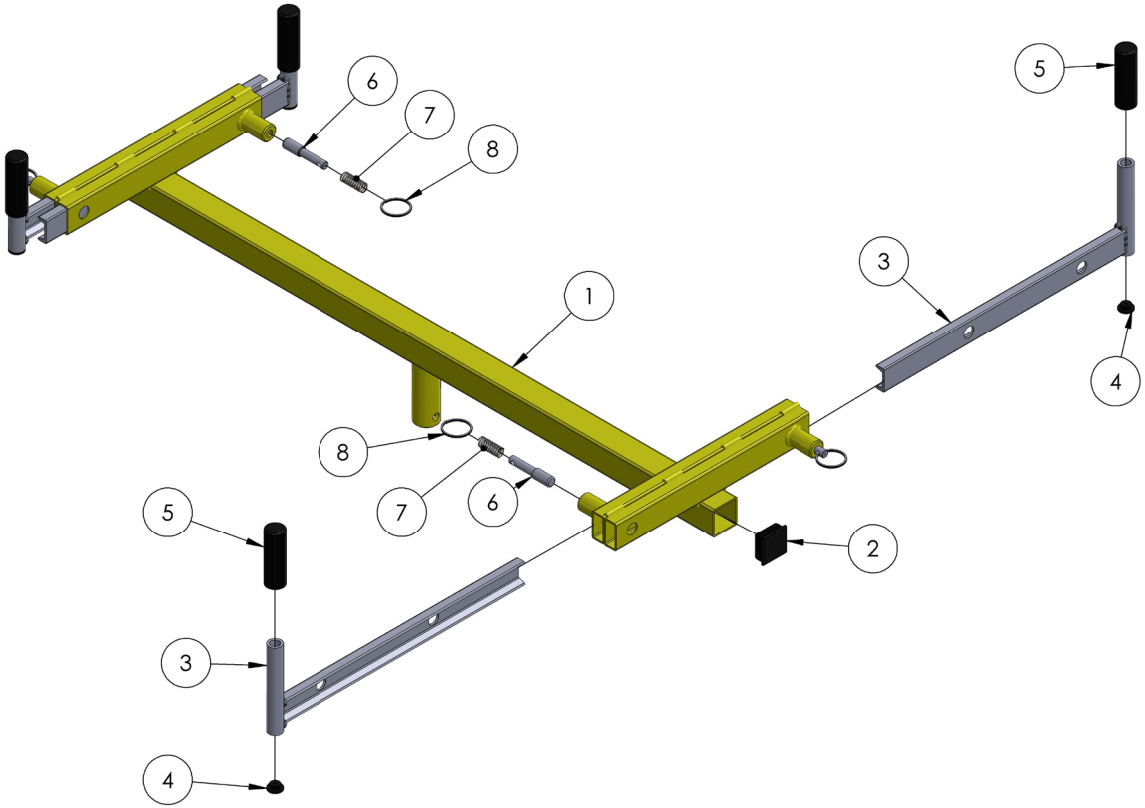

ITEM NO.	PART NUMBER	DESCRIPTION	QTY.
1	784473	HVAC/ELEC. CRADLE WELDMENT	1
2	779924	CAP, 1-1/2" SQUARE TUBE, BLK	2
3	784469	CROSS ARM RAIL WELDMENT	4
4	779926	BUSHING, RUBBER BUMPER	4
5	779927	GRIP, ROUND SOFTEX BLK.	4
6	782510	PLUNGER	4
7	776212	SPRING, #DWC - 042 - G - 9	4
8	775110	SPLIT RING 1-1/4" NICKLE PLATED	4

WINCH ASSEMBLY

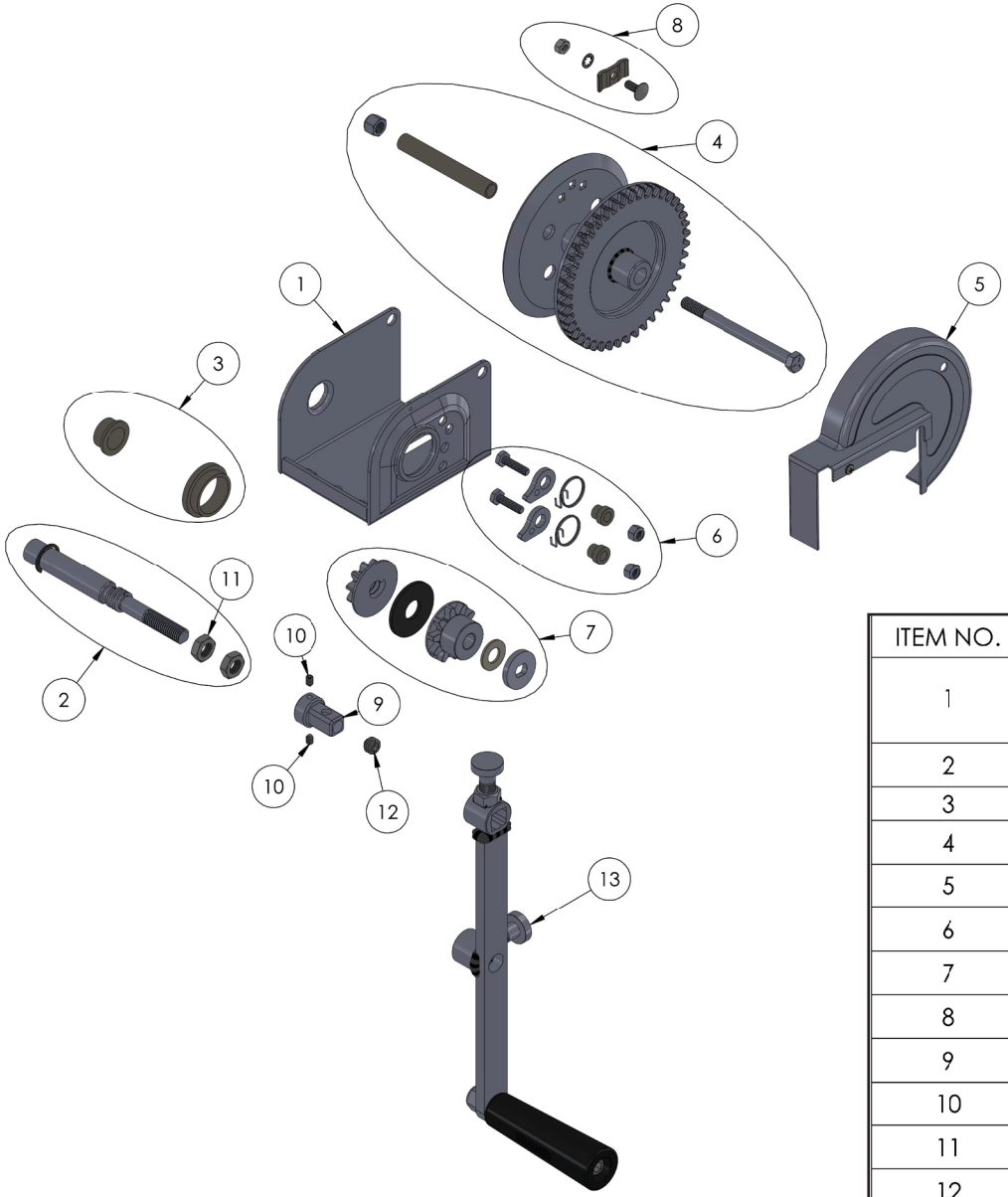

ITEM NO.	PART NUMBER	DESCRIPTION	QTY.
1	EL-405 Winch Assembly Housing (NOT FOR SALE)	**NOT FOR SALE**	1
2	784794	WINCH SHAFT KIT, EL-405 LIFT	1
3	785958	WINCH HOUSING BEARING	1
4	785960	WINCH DRUM W/SHAFT	1
5	785962	WINCH COVER	1
6	785964	BRAKE DOG KIT	1
7	785966	BRAKE RACHET KIT	1
8	785968	CABLE KEEPER KIT	1
9	784284	WINCH HANDLE ADAPTER	1
10	771431	SET SCREW 1/4-20 X 5/16"LN FLT PT	2
11	772500	NUT, JAM LOCK 1/2-13	2
12	771439	SCREW,SET 1/2-13 X 3/8 CUP PT	1
13	784289	WINCH HANDLE ASSEMBLY, 2300	1

WINCH HANDLE ASSEMBLY

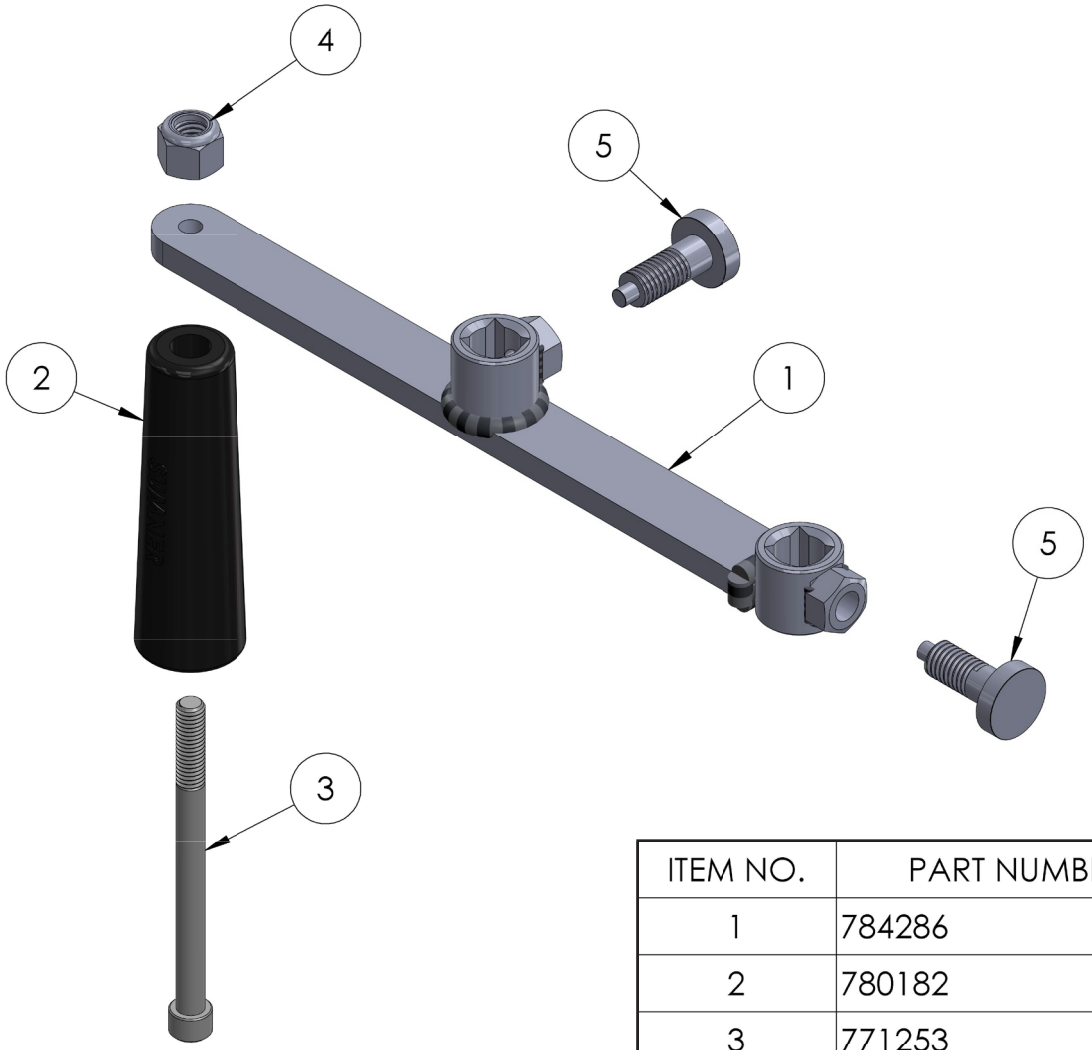

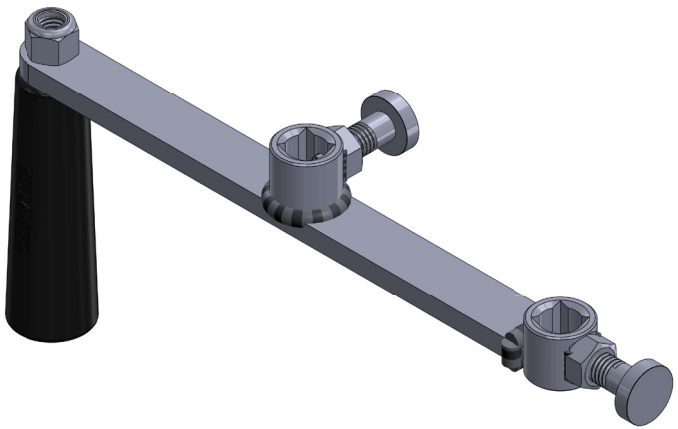

ITEM NO.	PART NUMBER	DESCRIPTION	QTY.
1	784286	WINCH HANDLE WELDMENT	1
2	780182	WINCH HANDLE SLEEVE	1
3	771253	SCREW, SH 1/2-13 X 4.75	1
4	772358	NUT, INSERT JAM 1/2 -13	1
5	774180	SPRING PLUNGER,M 1/4 DIA.	2

TRUCK ASSEMBLY

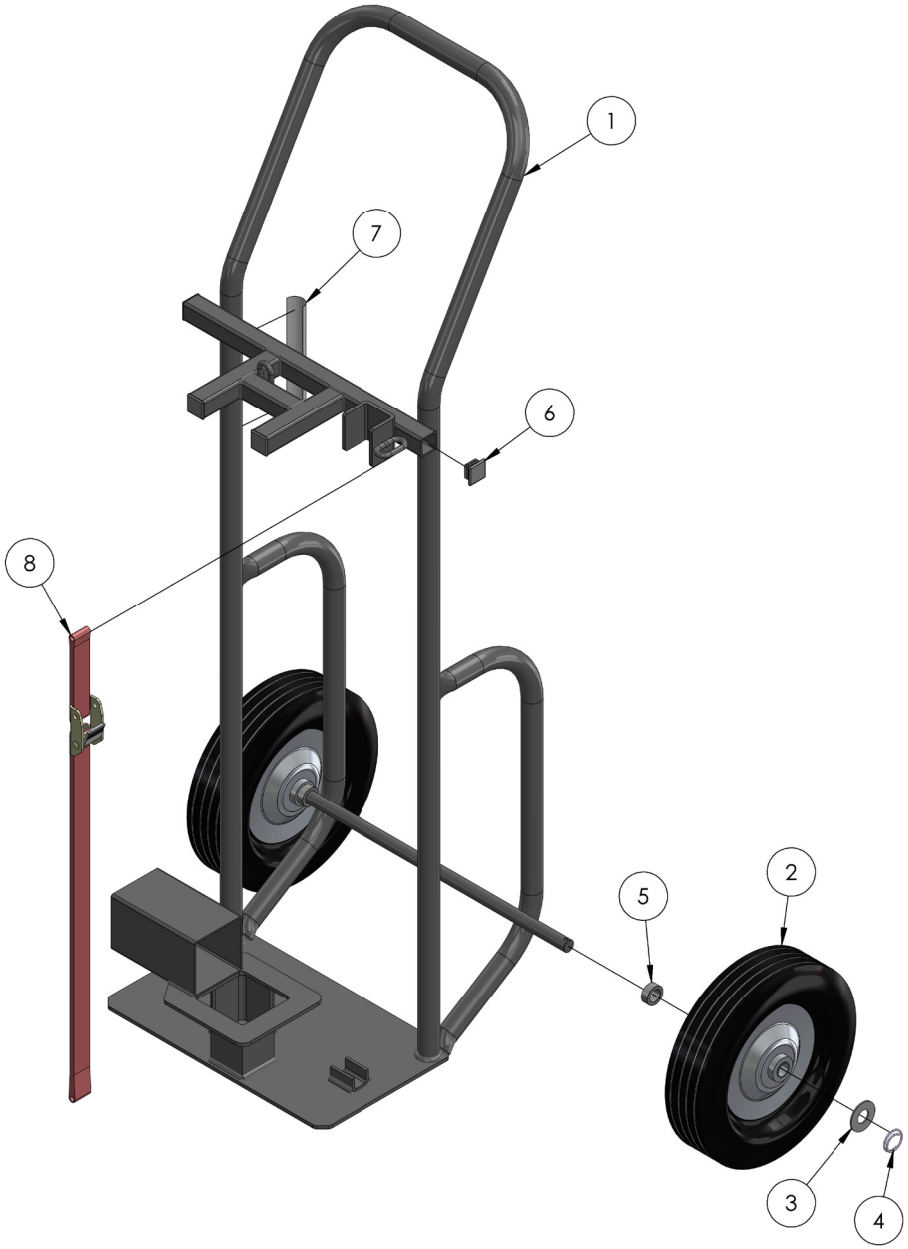

ITEM NO.	PART NUMBER	DESCRIPTION	QTY.
1	784509	DRYWALL LIFT TRUCK WELDMENT	1
2	779011	WHEEL, 10" RUBBER TIRE	2
3	773051	WASHER, FLAT 5/8 USS	2
4	774054	COTTER, CIRCLR Z/P 0.072 X 1.125"	2
5	782393	SPACER, 5/8 X 1 X 0.375	2
6	779915	CAP, 1.0 SQ. TUBING BLK	4
7	778422	LABEL, "DRYWALL LIFT TRUCK"	1
8	779225	MAST HOLD DOWN STRAP	1